DORIAN INTERNATIONAL TOOL

The First Choice™ TECHNOLOGY

TOOL POST & TOOLHOLDERS

Quality
Technology
Performance

Quadra® Indexing Quick Change Tool Post

Features

- Built With High Strength Alloy Steel
- Thru Hardened Core & Gas Nitrided Outside Surfaces
- Holds 4 Quick Change Toolholders Simultaneously
- Indexing Flexibility every 15°
- Multi Directional Indexability
- 24 Locking Positions
- Anti-Rotation Pins

Performance

- Simple, Easy to Use & Operate
- Quick, Precise, Rigid & Heavy Duty
- From Prototypes to High Production Applications
- Super Precise for Finishing Operations
- Heavy Duty for Roughing Operations
- Toolholders Repeatibility ± .0001” / .00254mm
- Indexing Repeatibility .00005” / .00127mm

QITP Tool Post and Toolholders Reference

Technical Support pages:

6 to 17

Tool Post & Toolholders Ordering Information pages:

18 to 33

Super Quick Change Tool Post

Features

- Built With High Strength Alloy Steel
- Thru Hardened Core & Gas Nitrided Outside Surfaces
- Single Quick Change Toolholder
- Triple Locking System
- Adjustable Multi Locking Handle Positioning
- Anti Rotation Pins

Performance

- Simple, Easy to Use and Operate
- Precise for Finishing Operations
- Extra Heavy Duty for Roughing Operations
- Toolholder Repeatability ± .0001” / .00254mm

SDN Tool Post and Toolholders Reference

Technical Support pages:

34 to 45

Tool Post & Holders Ordering Information pages:

46 to 61

Terminology of a Manual Lathe

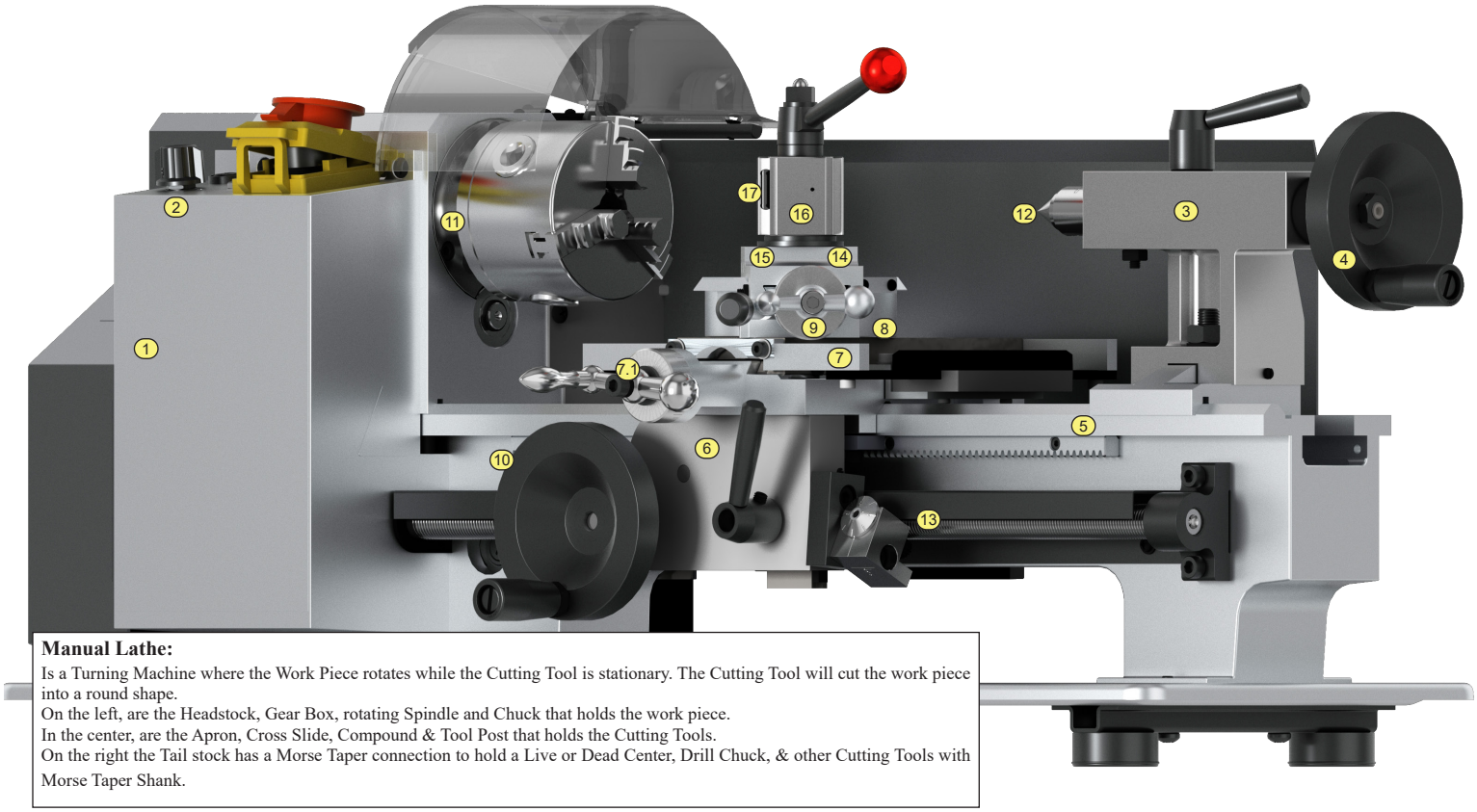

Manual Lathe:
Is a Turning Machine where the Work Piece rotates while the Cutting Tool is stationary. The Cutting Tool will cut the work piece into a round shape.
On the left, are the Headstock, Gear Box, rotating Spindle and Chuck that holds the work piece.
In the center, are the Apron, Cross Slide, Compound & Tool Post that holds the Cutting Tools.
On the right the Tail stock has a Morse Taper connection to hold a Live or Dead Center, Drill Chuck, & other Cutting Tools with Morse Taper Shank.

1. Headstock
   Is the Part of the Manual Lathe that holds the Gear Box system that controls the speed and cutting feed of the lathe, the Rotating Spindle that holds the Chuck where the Work piece is held.

2. Speed & Feed Adjustment
   Controls that allow the user to adjust the speed and feed of the lathe.

3. Tailstock
   On the right, the Tailstock slides over the bed way of the lathe, and has a Morse Taper connection to hold a Live or Dead Center to support long work pieces, and or Drill Chuck, & other Cutting Tools with Morse Taper Shank

4. Tailstock Movement Handle
   This handle moves the tail stock in the "Z" axis (towards and away from the chuck).

5. Bed
   One of the principal parts of a machine tool with accurately machined ways or bearing surfaces to support and align other parts of the machine.

6. Apron
   In the center, the Apron is from where the operator controls all the machining functions of the lathe. Cross Slide built on top of the Apron, controls the cutting depth on the work piece. The Compound attached over the cross slide, swings and locks in both directions, allows manually to cut short angles, taper & special operations. The Tool Post is a single or multi tool holder, mounts over the compound and holds the Square Cutting Tools as well Round Tools for drilling, Boring and I.D. Threading.

7. Cross-Slide
   The part of the lathe that moves across the bed. It also holds the compound where the tool holding device is mounted.

7.1. Cross-Slide Dial
   This dial moves the cross slide in the "X" axis (toward and away from the operator).

8. Compound
   The part of a lathe set on the carriage that carries the tool post and holder. It is designed to swing in any direction and to provide feed for turning short angles or tapers.

9. Compound Dial
   This dial moves the compound toward and away from the handle itself.

10. Cross Feed Handle
    This handle moves the cross slide and compound in the "Z" axis (towards and away from the chuck).

11. Chuck
    A device on a lathe to hold the work piece.

12. Dead or Live Center
    A tool that is inserted into the tail stock to support long work pieces where the cutting force would deflect the part excessively.

13. Lead Screw
    The long, precision screw located in front of the lathe bed, geared to the spindle and used for cutting threads.

14. T-Slot
    Inverted T-shaped slot on the compound of a lathe. Used for securing a tool post onto the compound.

15. T-Nut
    A T-shaped nut that is slid into the T-Slot of the compound. It is used to secure a tool holding device to the compound.

16. Quick Change Tool Post
    A device for holding tooling on the compound of a lathe. It can be as simple as a fixed system for holding one tool or as complex as an indexing quick change system.

17. Quick Change Holder
    A device to hold a cutting tool on a lathe that uses a system to allow for quick changing of tooling from one operation to the next. It is generally applied by using a dovetail slot that is slid over a male dovetail on a tool post.

18. Center Height
    The distance from the center line of the chuck to the top of the compound.

19. Lathe Swing
    The dimension of a lathe determined by the maximum diameter of the work piece that can be rotated over the ways of the bed.

20. Shank System
    The diameter of a round cutting tool or the height of a square shank cutting tool.

Terminology of a CNC Tool Room Lathe

CNC Tool Room Lathe:
Is a Turning Machine where the Work Piece rotates while the Cutting Tool is stationary. The Cutting Tool will cut the work piece into a round shape.
The lathe can be operated with the CNC Control as well as in manual mode.
On the left, are the Headstock, Driving Motor, Rotating Spindle and the Chuck that holds the work piece.
In the center, are the Apron and Tool Post that holds the Cutting Tools.
On the right, the Tail stock has a Morse Taper connection to hold a Live or Dead Center.

All Dorian Turning Toolholders, Boring Bars and Inserts offered in this catalog are engineered for use on both CNC and Manual Lathes.

Spindle: Driving mechanism that supplies power to the chuck. The chuck is the device that holds the work piece.

Dead or Live Center: A tool that is inserted into the tail stock of the lathe to support longer work pieces where the cutting force would deflect the part excessively.

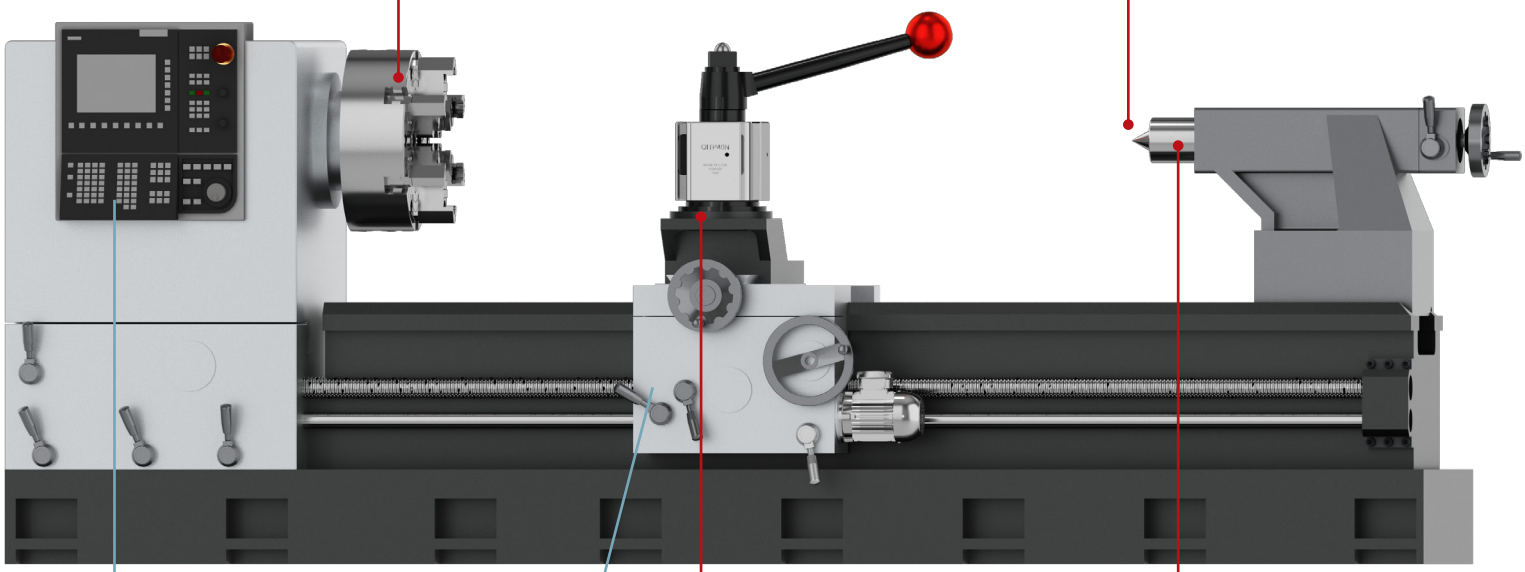

CNC Controls:
CNC tool room lathes can be operated manually or programmed to run automatically.

Manual Handle:
To operate the machine manually.

Riser Block: Where the tooling device such as a tool post or turret is set up.

Tail Stock: The part of a lathe that supports the end of a work piece with a center. It may be positioned at any point along the way of the bed and may be offset from center to machine tapers.

Quadra® Indexing Quick Change Tool Post & Toolholders

QITP with 4 Toolholders
&
24 Positions Indexability

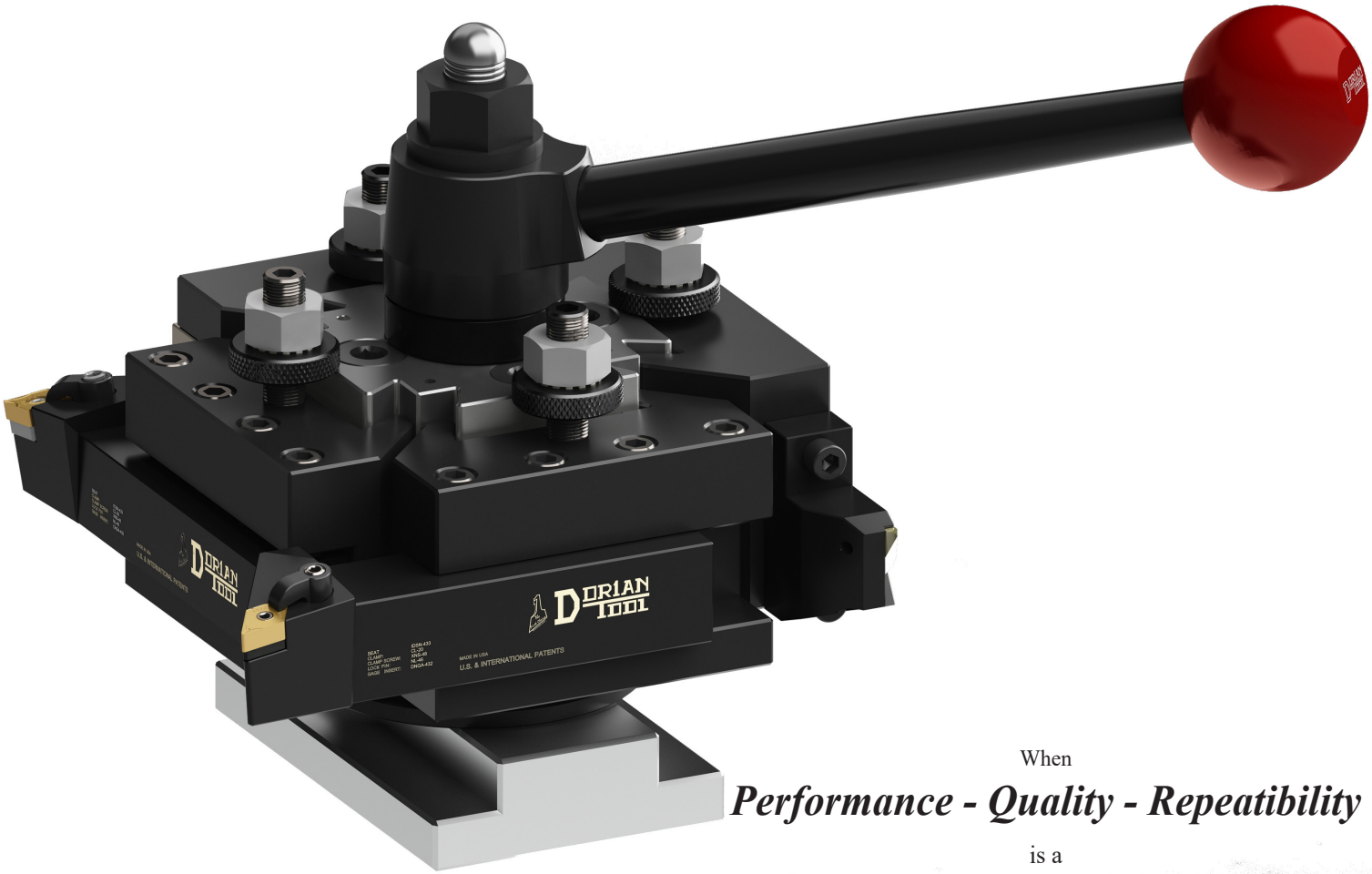

When

Performance - Quality - Repeatibility

is a

Demand

The

Quadra Indexing Quick Change Tool Post

is the only

Option

Quadra® Tool Post and Toolholder Sizes & Crossover

All the Quadra and SDN Quick Change Toolholders, are built with 4140 Chromium- Molybdenum High Strength Alloy Steel, for Rigidity, Stability & Performance.

The Toolholders are treated with a Special Low Temperature Heat Treating Process, to Protect the Toolholder's Surface, while minimizing Cutting Vibrations.

Turning and Facing Toolholders (No. 1 & 2 toolholders) are built with a larger tool-seat than the industry's standard, to hold a wider range of oversized Cutting Tools.

All the Quadra & SDN Boring Bar Holders feature a DUAL Locking System for Maximum Rigidity, Stability & Performance in the Roughing Operations, and High Surface Finish & Close Tolerances for finishing Operations.

SDN
Tool Post

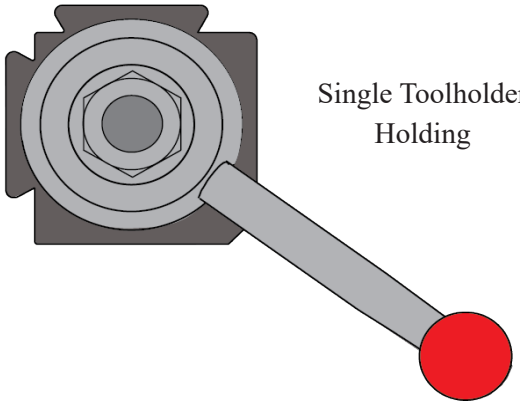

Single Toolholder Holding

SDN
Toolholders

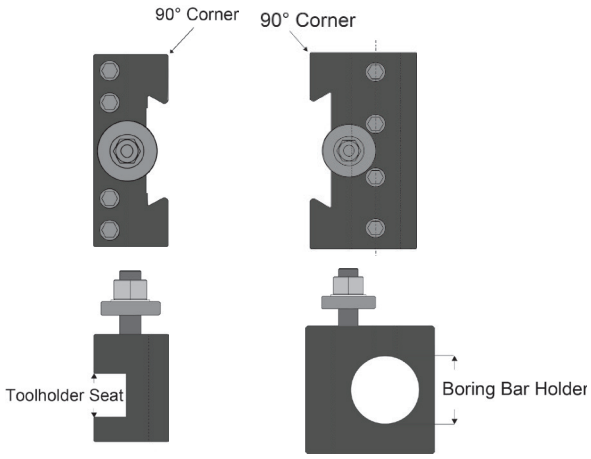

QITP
Tool Post

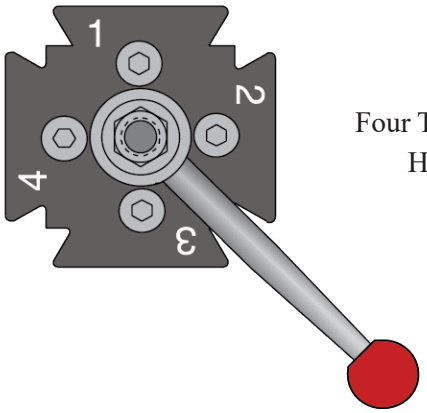

Four Toolholders Holding

QITP
Toolholders

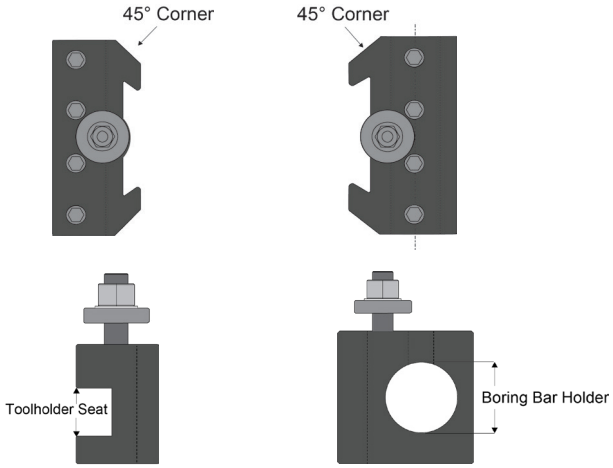

Boring Bar Capacity
See Boring Bar Holder Chart pages 28 to 29

SDN & QITP Crossover		Tool Post Size Nominal Dimension		Toolholder Capacity		Boring Bar Toolholder
Super Quick Change™	Quadra ®	Inch	mm	Inch	mm	
SDN25AXA	QITP25N	2.500	63.5	3/8 - 3/4	10 - 20	See Boring Bar Holders
SDN30BXA	QITP30N	3.000	76.2	1/2 - 1.0	12 - 25	
SDN35CXA	QITP35N	3.500	88.9	3/4 - 1.0	20 - 25	
SDN40CA	QITP40N	4.000	101.60	1.0 - 1 1/4	25 - 32	
SDN50DA	QITP50N	5.000	127.0	1 1/4 - 1 1/2	32 - 40	
SDN60EA	QITP60N	6.000	152.4	1 1/2	40.0	

The Multi-Patented Tool Post with The Most Advanced Indexing and Locking Technology

2 Pre-Loaded Positioning Index Pins

24 Super Precise Ball Bearing Positioning & Locking System

Strong - Rigid - Precise!

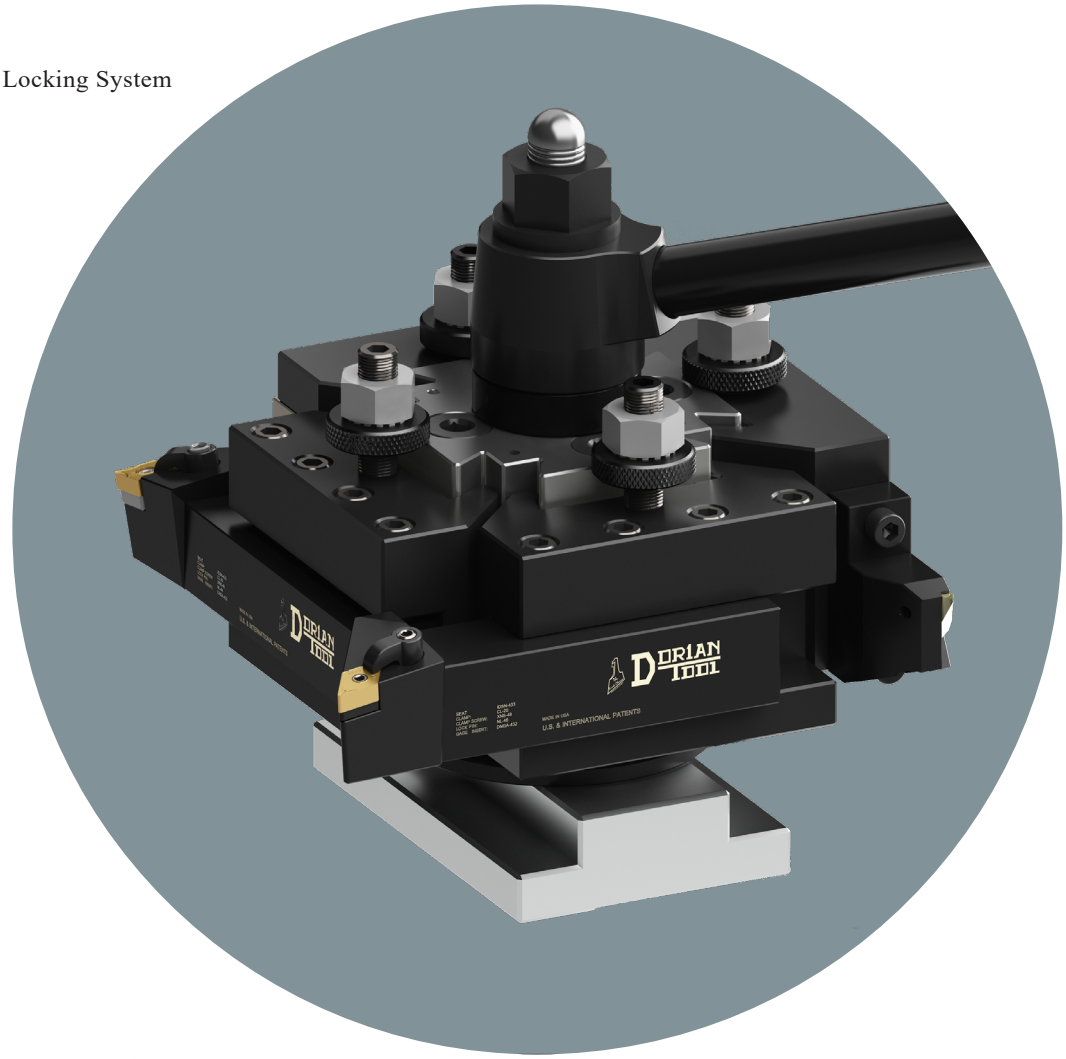

O.D. Turning Operations

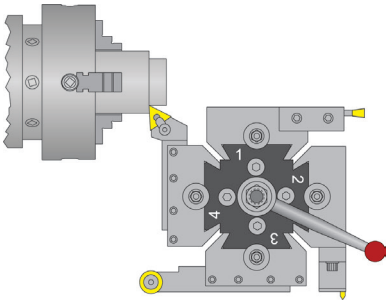

O.D. Chamfering Operations
15º Increments

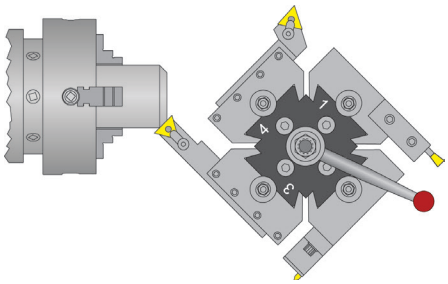

Combination
O.D. & I.D. Operations

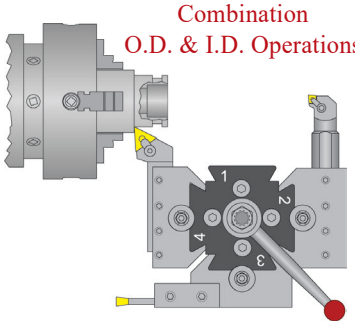

I.D. Turning Operations

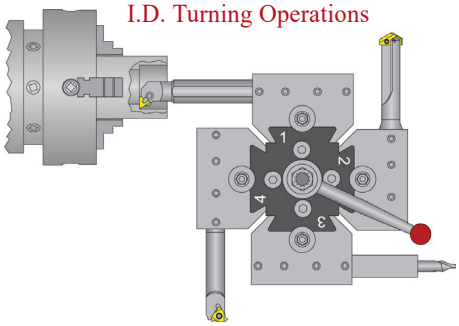

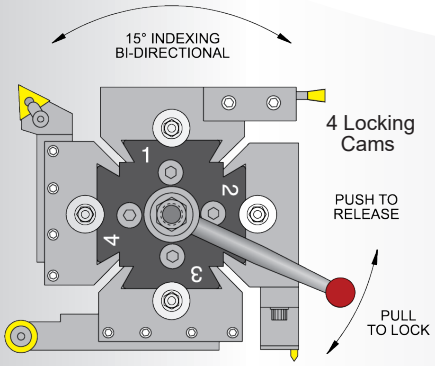

Easy To Operate: Push the handle away to release the indexing mechanism, rotate tool post to desired position and then pull the handle to lock the indexing mechanism.

Quick change toolholders are locked independently by individual locking cams. Locking wrench with handle is provided with the tool post.

Features

- Heavy Duty Construction
- Heat Treated High Strength Alloy Steel
- Precision Ground Toolholder Locking Stations
- “T Nut” Mounting System with Anti Rotation Pins
- Custom “T Nut” Available
- Ready to Install and Use
- Highest Locking Forces for Rigidity & Accuracy
- Positive Locking System with Absolute Zero Backlash
- 24 Super Precise Ball Bearing Locking System
- 4 Quick Change Toolholders locked Independently
- Wide range of Toolholders available
- Heavy Duty Toolholders for Larger Cutting Tool Capacity
- 1 to 4 Toolholders Ready to Use
- Instant Toolholder Repositioning
- Precise Toolholder Repeatability of .0001”/.00254mm
- Indexing Flexibility of every 15°
- Indexing Repeatability of .00005”/.00127mm

O.D. Turning Operations

Finishing to Roughing or Threading

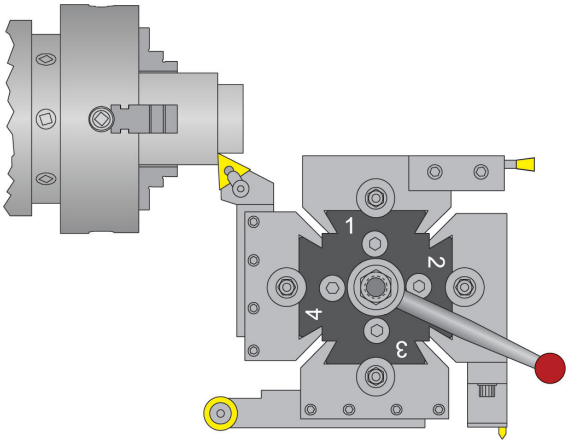

The tool position closest to the chuck (left dovetail as shown above) is used for turning outside diameters. It holds the tool at the best location for clearance and rigidity when turning, threading, cut-off, grooving, and chamfering.

I.D. Turning Operations

Finishing to Roughing or Threading

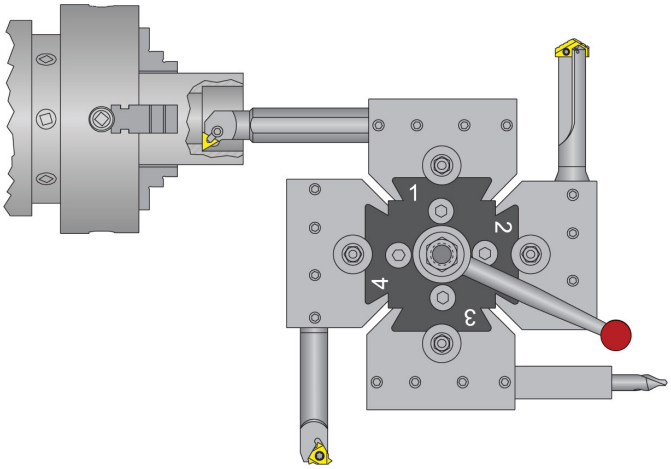

The tool position closest to the center line of the chuck (top dovetail as shown above) is used for turning inside diameters. It holds the tool at the best location for clearance and rigidity when boring, threading, grooving, drilling, and center drilling.

O.D. Chamfering Operations

15º Increments

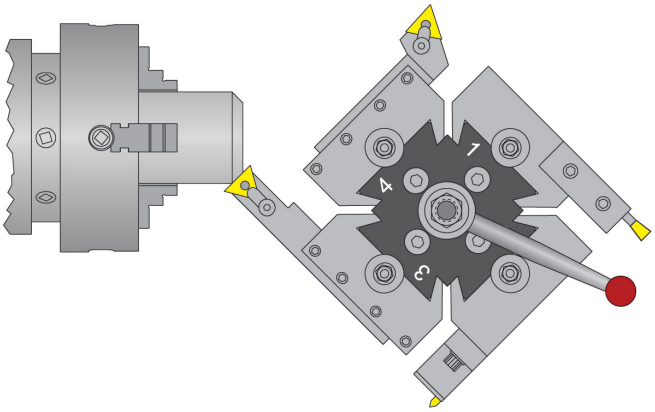

The tool post can be indexed every 15°. This will allow the user to rotate a tool into chamfering position. One tool could then be used for O.D. turning and chamfering, reducing the number of tools to complete a job.

Combination O.D. & I.D. Operations

Finishing to Roughing or Threading

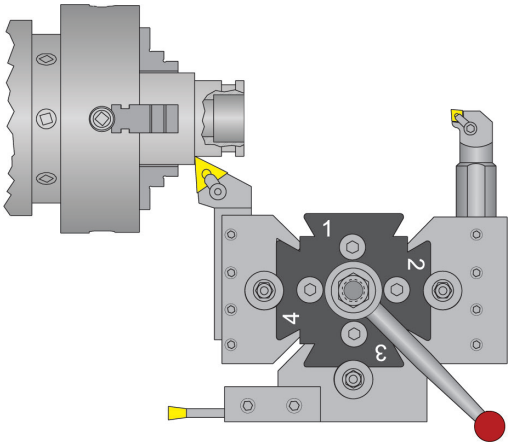

Combinations of O.D. and I.D. tools can be used on the tool post at once. For simple parts where minimum tool changes are required, this method can increase productivity and precision. Tool clearance should be considered when placing the tools on the tool post.

Quadra® Tool Post Cross Section

The Holding post and Flange Nut;
Secures the Tool Post on the lathe

Index Post;
Is a precision ground and threaded shaft, that makes the epicenter of all the mechanical functions of the Quadra Indexing Tool Post, dictating the precise repeatability, performance and rigidity of the Tool Post

The Indexing Locking Handle;
engages and disengages the Locking System of the Tool Post.

QITP Tool Post Body;
Is built with AISI 4140, a Chromium, Molybdenum, Manganese Alloy Steel, known for its Toughness, High Fatigue & Torsional Strength. The material is Thru Hardened and Stress Relieved. To Increase wear and fatigue resistance of the Tool Post working surfaces, a Plasma Nitriding process is applied to the Tool Post before grinding, making its life almost endless under any working condition

Locking Nut;
Is threaded onto the index post. It locks the Tool Post down by providing downward force (when rotated clockwise) and unlocks the Tool Post by allowing the Disengaging Springs to lift it up (when rotated counter clockwise).

The Eccentric Toolholder Locking Cam;
Exercises over 20,000 lbs of positive locking force on the sliding gib with absolute zero backlash.

Tool Post Holders Station:
- 4 Super Precision Dovetail Holding Stations
- From 1 to 4 Toolholders locked independently

Patented Quick Change Holder Locking System;
The quick change toolholder locking system has a sliding gib which travels inside the fixed dovetail of the tool post. When pushed out by the locking pin, it pulls and locks the toolholder against the precision ground dovetail of the Tool Post within .0001" of repeatability.

The Tool Post;
is equipped with six O-Ring seals, to protect most of the coolant, chips, and debris from getting inside the Tool Post.

Disengaging springs;
Lifts and disengages the Tool Post from the bottom locking plate in order to index to the desired position.

Pre-loaded indexing pins;
locates the preset positions of the Tool Post.

Patented Indexing System;
24 indexing positions
15° increments
Re-indexing Repeatability within .00005" / .00127 mm

The Large Base Plate;
Holds the Tool Post in a fixed and precise position, providing a mounting surface with rigidity, stability and the precise repeatability of the Tool Post.

Indexing System Performance;
The accuracy and repeatability of this system will not deteriorate by wear; however, will only get better with usage.

Tool Post;
Is provided with a T-nut for American mounting style or with a bolt shaft for European mounting style.

Anti Rotation System;
Consists of a set of pins to engage on the T-Nut, or Cap Screw to engage on the compound of the lathe.

24 Super Precise Ball Bearings;
Indexing and Locking System, assures accuracy and precise repeatability when Tool Post is indexed and locked.

Tool Post Mounting

Quick, Simple, & Rigid

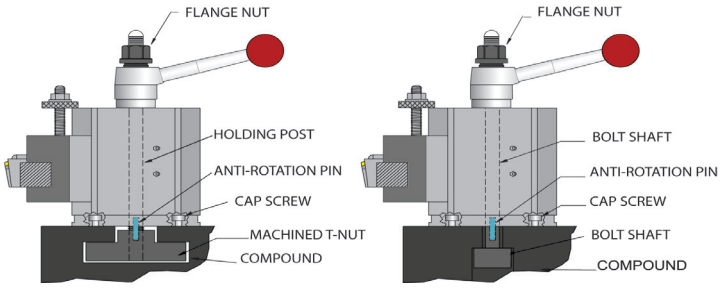

American Style European Style

Tool post mounting is accomplished quickly and easily with either a "T" Nut that slides over the lathe compound or a Bolt Shaft. Tightening the Flanged Nut will provide a rigid and reliable mounting of the tool post. The "T" Nut is provided blank or machined according to customer specification. Using the Bolt Shaft is the common mounting method on European lathes.
Optional cap screws and dowel pins may be used to secure the tool post directly to the compound or the T-nut. This is advantageous if there is tool post shifting during heavy or interrupted cuts.

Indexing System

Repeatability within .00005'

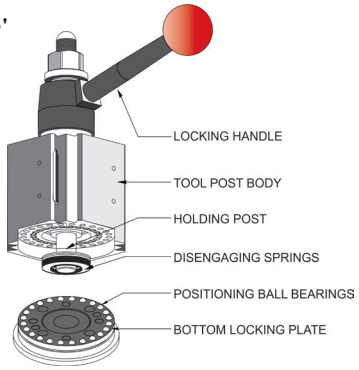

With the locking handle in unlocked position, the disengaging spring set lifts the tool post from the bottom locking plate. Two pre-loaded index pins allow the tool post to be indexed to any of the preset positions in 15° increments. Pulling the locking handle to the locked position engages the locking mechanism of the tool post for superior rigidity and repeatability.

Indicating Position

Squareness within .0005"

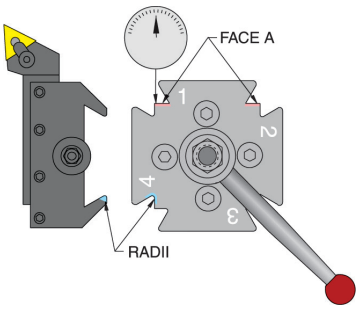

The four dovetails are ground at 90° square (± .0005"). When mounting, it is necessary that the Face "A" to be set parallel to the lathe axis with an indicator in order for drills to work properly. The dovetail surfaces must be kept clean and lubricated at all times to prevent misalignment of the tool holder when locked on the tool post.

Operation

Index from Tool to Tool in Seconds

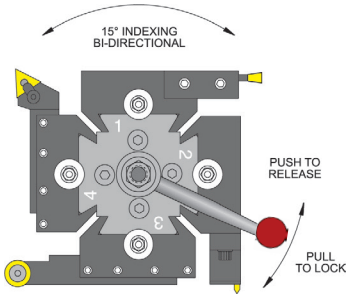

Push the handle to release , index into the desired position, then pull the handle to lock the tool post.

Holder Locking System

20,000 lbs Locking Force

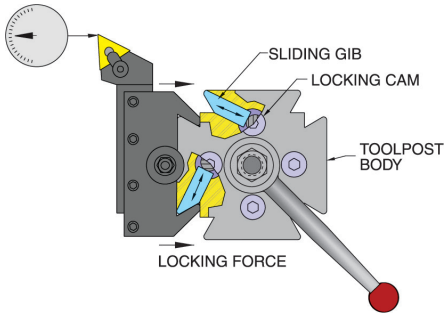

The holder locking system of the Quadra Indexing Tool Post is based on the four Sliding Gibs that travel inside the tool post body and are pushed against the holder by a cam style Locking Pin, locking it positively. The cam rotates from 0° (Release Position) to approximately 45° (Locking Position).

The repeatability of the tool holders is ± .0001" and can be checked with a dial indicator, fixed on the tool post body as shown above. Each tool is independently locked, giving it flexibility to use from one to four tools simultaneously.

Holder Center Height Adjustment

Positive Center Height Adjustment

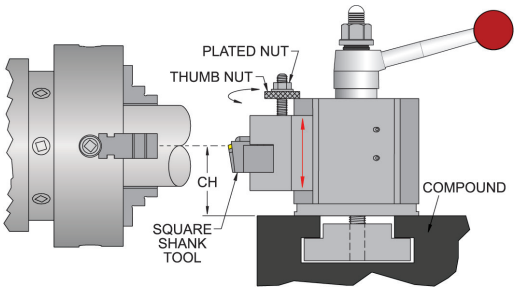

The Center Height Adjustment Assembly allows an easy and accurate adjustment of the cutting tool height, first, by screwing or unscrewing the Thumb Nut until the desired height is reached, and next, by locking the Plated Nut to preserve it. Maximum center height has been reached when the top of the holder is flush with the top of the tool post. Minimum center height has been reached when the bottom of the holder comes in contact with the Bottom Locking Plate.

American Mounting System

A customized T-Nut is used to Lock Down the Tool Post.
For T-Nut Specifications See page 13

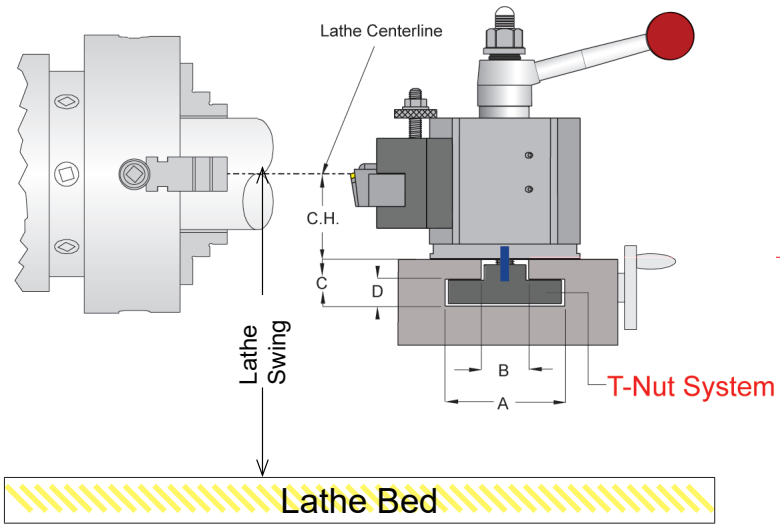

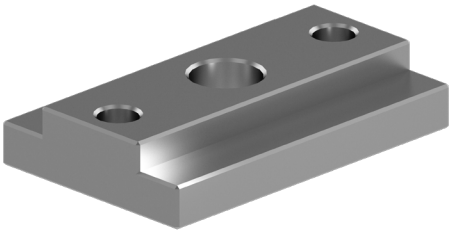

European Mounting System

A customized Bolt-Shaft is used to Lock Down the Tool Post

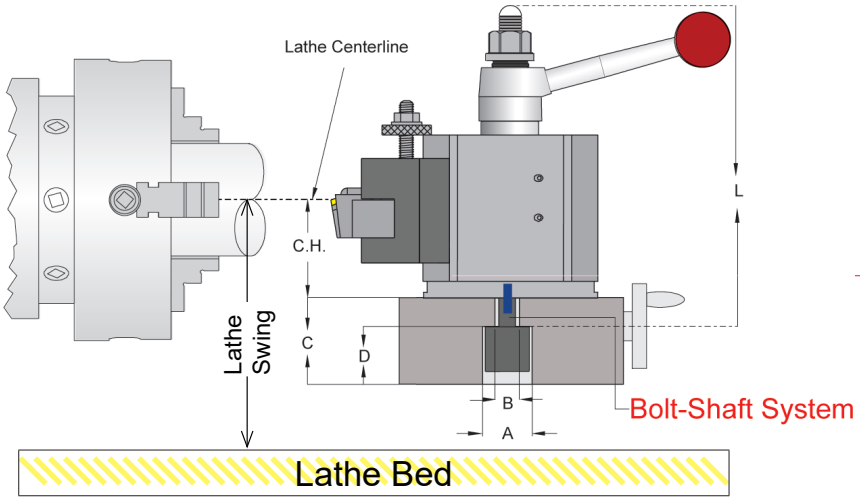

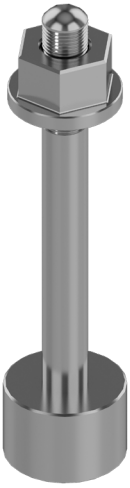

Bolt Shaft non standard item, supplied only on request

Each Tool Post is supplied with a Blank T-Nut or Bolt Shaft that the customer machines to their required dimensions. For custom machined T-Nut or Bolt Shaft, please specify the dimensions A, B, C, and D precise within +/-.003in.

** Please place an X for American or European mounting Style in the boxes above.*

Blank T-Nut

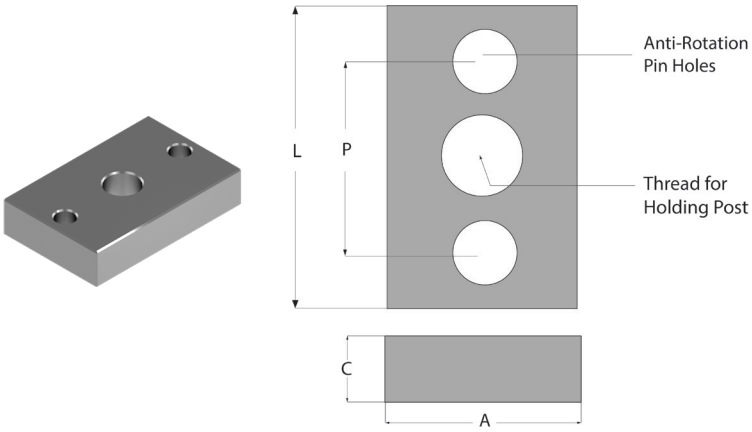

Machined T-Nut

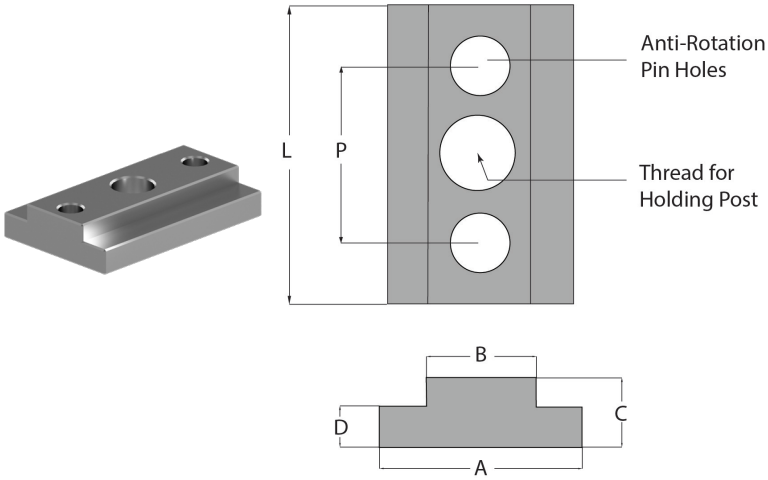

QITP							
Blank T-Nut Description							
Reference Tool Post	**Blank T-Nut UPC No.**	**A**	**C**	**L**	**Thread Size**	**Anti-Rotation Pin Size**	**P**
QITP25N	73310105761	1.5”	1/2”	2.5”	1/2 - 20	6mm	1.200”
QITP30N	73310105796	2”	5/8”	3”	1/2 - 20	6mm	1.700”
QITP35N	73310105830	2.25”	3/4”	3.5”	5/8 - 18	8mm	2.000”
QITP40N	73310105865	2.5”	3/4”	4”	3/4 - 16	8mm	2.500”
QITP50N	73310105900	3.”	1.25”	5”	1 - 14	10mm	3.000”
QITP60N	73310105935	4”	1.5”	6”	1-1/8 - 12	10mm	4.000”

The Blank T-Nut is supplied with the Tool Post at no extra charge.

QITP									
Machined T-Nut Description									
Reference Tool Post	**Machined T-Nut UPC No.**	**A**	**B**	**C**	**D**	**L**	**Thread Size**	**Anti-Rotation Pin Size**	**P**
QITP25N	73310105762					2.5”	1/2 - 20	6mm	1.200”
QITP30N	73310105797					3”	1/2 - 20	6mm	1.700”
QITP35N	73310105831					3.5”	5/8 - 18	8mm	2.000”
QITP40N	73310105866					4”	3/4 - 16	8mm	2.500”
QITP50N	73310105901					5”	1 - 14	10mm	3.000”

For Machined T-Nut Dimensions, fill in the blanks.

Quadra® Tool Post Cutting Tool Center Height Set-Up

Factors that determine the proper Tool Post for a specific lathe:

1. Lathe Swing
2. Tool Center Height
3. Tool Size
4. Tool Post Mounting type
5. Motor Horse power
6. Maximum Chuck RPM
7. Type of Lathe
8. Type of Work
9. Prototype or Production
10. Light Duty Work
11. Heavy Duty Work

How to measure Tool Center Height "C.H."

"CH" = Center Height is measured from top of compound to lathe center line
"P" = Toolholder bottom lip
"B" = Tool Post Height *(See page 18)*
"E" = Tool Post Toolholder Height *(See pages 19 - 29)*
"T" = Turning Toolholder

Optimum
Center Height

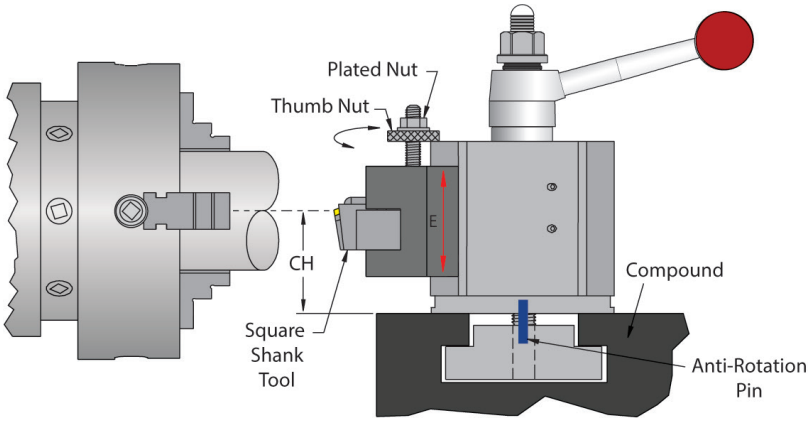

Tool Post Mounting Technical Notes

Mount the Tool Post T-Nut into the Compound

For Best Rigidity Install Anti Rotation Pins.

Set the Tool Post parallel with the Lathe Bed way

Tighten the Flange to Lock Tool Post Properly

Minimum
Center Height

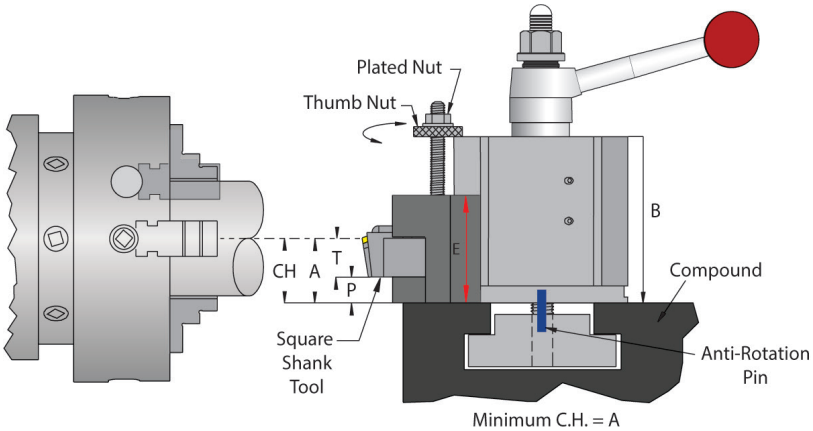

Toolholder Center Height Technical Notes

Place the Toolholder on the Tool post, but not locked.

Loosen the Plated Nut of Height Adjustment Screw

Turn the Thumb Nut up or down till the Insert tip is centered with the Lathe Center Line.

Lock the Toolholder by pulling on the locking handle.

Tighten the Plated Nut against the Thumb Nut to preserve its position.

Maximum
Center Height

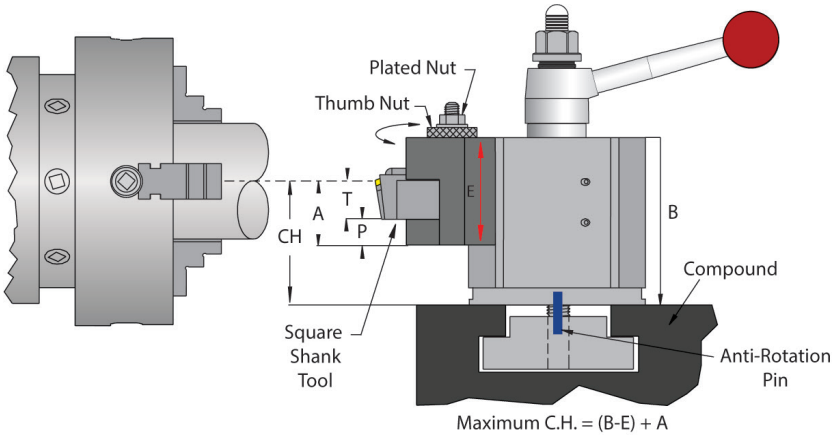

Center Height and Cutting Tool Capacity Technical Notes

The recommended cutting tool size should be used.

The Minimum Center Height, is when the Toolholder is all the way down.

If the Insert is above the Lathe centerline use a smaller Cutting Tool.

The Maximum Center Height, is when the Toolholder is all the way up.

If the insert is below the Lathe centerline, use a larger Cutting Tool.

	Structure Specifications	Features	Application

QITP_N Quadra Indexing Quick Change Tool Post

Page B-15

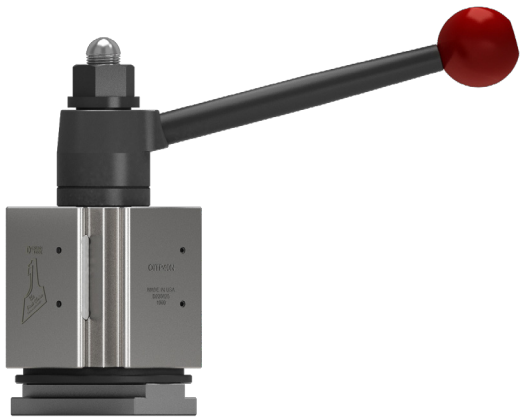

Structure Specifications	Features	Application
6 Tool Post sizes are available: QITP25N - 2.5" (63mm) Square QITP30N - 3.0" (76mm) Square QITP35N - 3.5" (89mm) Square QITP40N - 4.0" (102mm) Square QITP50N - 5.0" (127mm) Square QITP60N - 6.0" (152mm) Square Toolholder Capacity: 3/8" (10mm) to 1.5" (40mm)	Designed with the most Advanced Technology Manufactured with the Highest Quality The Best Turning Performance of any Tool Post	For all the Multi Turning Applications From Prototype to High Production From High Precision to Heavy Roughing

No. QITP_N-1 Turning & Facing Holder

Page 19

Structure Specifications	Features	Application
Holders are Built with 4140 Chromium-Molybdenum Alloy Steel Special Heat Treat Process to protect Surfaces, & minimize Cutting Vibrations Quick Change Mounting	Toolholder Repeatability within .0001"/.00254mm Toolholder Squareness and Parallelism .0005"/inch (.012mm/25mm) Oversized capacity for larger square shank toolholders	For Multi Turning and Facing Operations

No. QITP_N-2 Turning, Facing & Boring Holder

Page 19

Structure Specifications	Features	Application
Holders are Built with 4140 Chromium-Molybdenum Alloy Steel Special Heat Treat Process to protect Surfaces, & minimize Cutting Vibrations Quick Change Mounting Toolholder Seat has a "V" Groove to hold a Round Boring Bar	Toolholder Repeatability within .0001"/.00254mm Toolholder Squreness and Parallelism .0005"/inch (.012mm/25mm) Oversized capacity for larger square shank toolholders Designed to hold Square Shank Toolholders & Small Boring Bars	Wide Range of Turning, Facing & Boring Operations

No. QITP_N-4,41,41S DUAL Extra Heavy Duty Boring Bar Holder

Page 20-21

Structure Specifications	Features	Application
Holders are Built with 4140 Chromium-Molybdenum Alloy Steel Special Heat Treat Process to protect Surfaces & minimize Cutting Vibrations Quick Change Mounting Built with DOUBLE Boring Bar Locking System 360° Collar Locking System Self Centering Screw Lock System For Boring Bars with & without Flats	Toolholder Repeatability within .0001"/.00254mm Toolholder Squareness and Parallelism .0005"/inch (.012mm/25mm)	

NEW 360 ° Double Locking System

For Quick & Precise Set-Up with the Maximum Rigidity

The new DUAL Boring Bar Holder, has been engineered to maximize the holding force of the Boring Bar, achieving the most possible Boring rigidity for Heavy Duty Roughing, and Stability for High Surface Finishing and Close Boring Tolerances.

Features:

Dual Locking System	Longer Cutting Tool Life	Higher Productivity
Set Screws Locking System	Maximum Locking Force	Best Roughing Performance
360° Collar Locking System	Maximum Rigidity & Stability	Best Surface Finish & Tolerance

Mounting of a Boring Bar with Flats

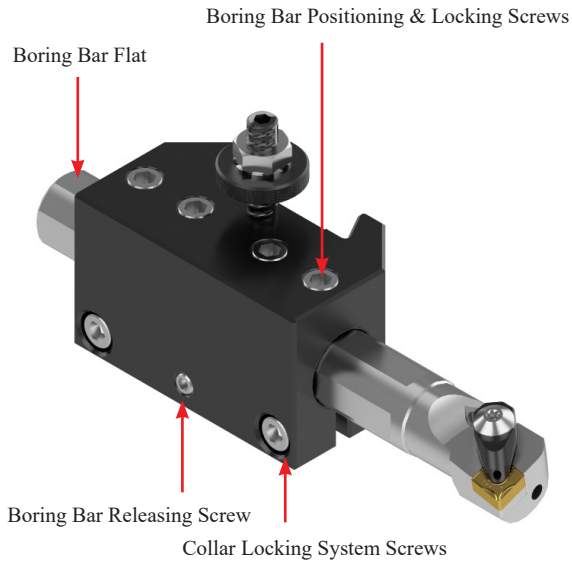

Mounting of a Boring Bar without Flats

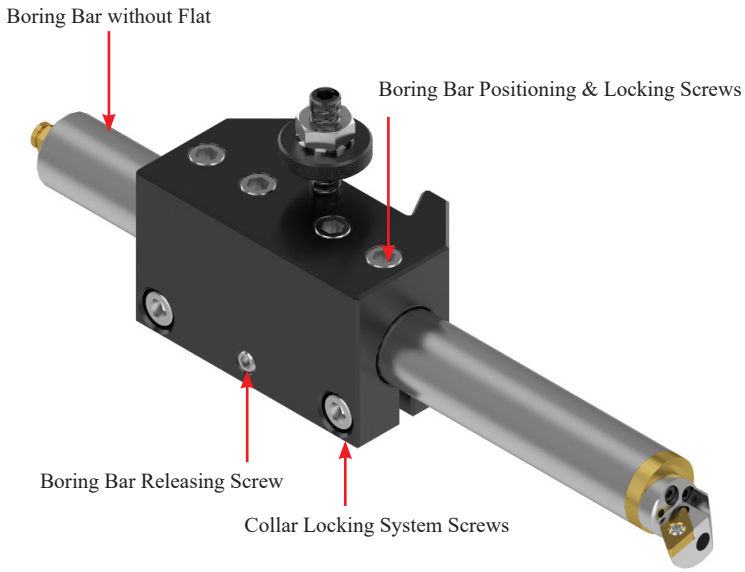

Locking Instruction

For Boring Bars with flats, Lock the Position Screws gently to set the Boring Bar on Center Line

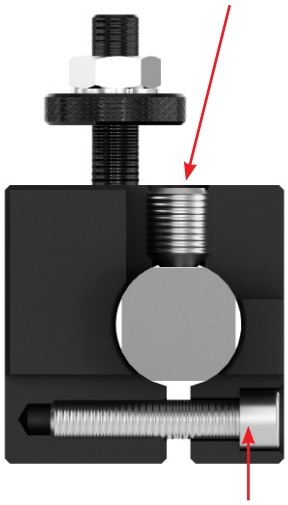

Once the Boring Bar is on center line, lock the holder side screws.
Once The Boring Bar is locked 360° around the Diameter in the Holder, tighten down the position screws.
The **DUAL** locking System will fuse the Boring Bar with the Holder in One Unit, achieving the best possible Boring Rigidity & Stability.

Boring Bars without flats,
Turn the Position Screws up,
do not touch the Boring Bar Surface.

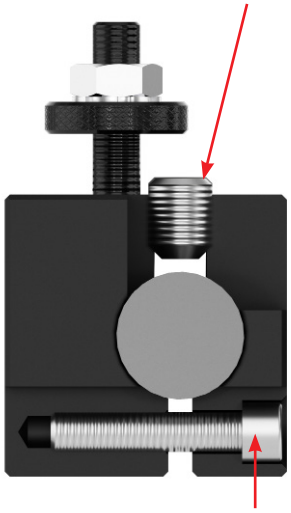

Set-Up the Boring Bar on center line, lock the holder side screws. The Boring Bar is locked 360° around the Diameter in to the Holder, fusing in One the Boring Bar with the Holder, achieving the best possible Boring Rigidity & Stability

	Structure Specifications	Features	Application
No. QITPN-5 Morse Taper Holder Page 21 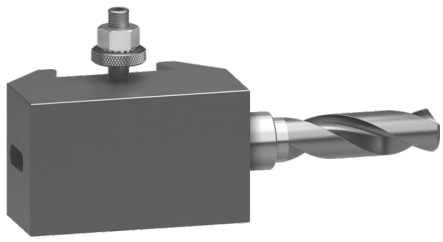	Holders are Built with 4140 Chromium-Molybdenum Alloy Steel Special Heat Treat Process to protect Surfaces, & minimize Cutting Vibrations Quick Change Mounting	Toolholder Repeatability within .0001”/.00254mm Toolholder Squareness and Parallelism .0005”/inch (.012mm/25mm)	For drilling, reaming or tapping using a drill chuck or morse tapered tools. Heavy Duty Drilling Operations
No. QITPN-36 5C Collet Holder Page 22 	Holders are Built with 4140 Chromium-Molybdenum Alloy Steel Special Heat Treat Process to protect Surfaces, & minimize Cutting Vibrations Quick Change Mounting	Toolholder Repeatability within .0001”/.00254mm Toolholder Squareness and Parallelism .0005”/inch (.012mm/25mm) Holds 5 C Collets Series For Round, Square & Hexagonal 5C Collets	Versatile for Multi Operations Drilling, Boring, Reaming, Threading, Tapping For Standard or Special Tools
No. QITPN-7-71C Reversible Cut-Off Blade Holder Page 22 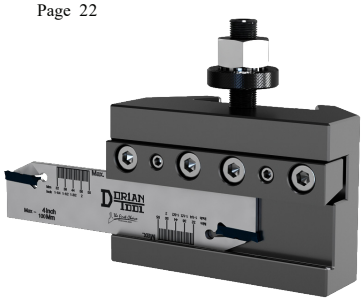	Holders are Built with 4140 Chromium-Molybdenum Alloy Steel Special Heat Treat Process to protect Surfaces, & minimize Cutting Vibrations Quick Change Mounting	Toolholder Repeatability within .0001”/.00254mm Toolholder Squareness and Parallelism .0005”/inch (.012mm/25mm) Holds Industry Standard Cut-Off Blades	Cut-Off Operations Grooving Operations
No. QITPN-881 O.D. or I.D. Threading Holder Page 28-29 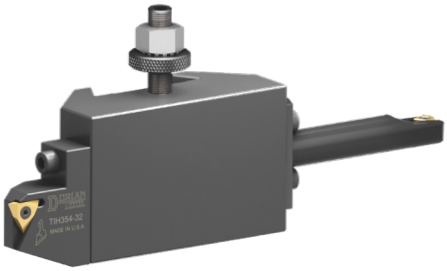	Holders are Built with 4140 Chromium-Molybdenum Alloy Steel Special Heat Treat Process to protect Surfaces, & minimize Cutting Vibrations Quick Change Mounting	Toolholder Repeatability within .0001”/.00254mm Toolholder Squareness and Parallelism .0005”/inch (.012mm/25mm) Holds OD Threading Cartridge Holds ID Threading Bar Easy to Set-Up, Simple to Use Uses Industry Standard Threading Inserts	O.D .and I.D. Threading

Quadra® Indexing Quick Change Tool Post

by

Dorian Tool

The TRUE Solution for every turning application

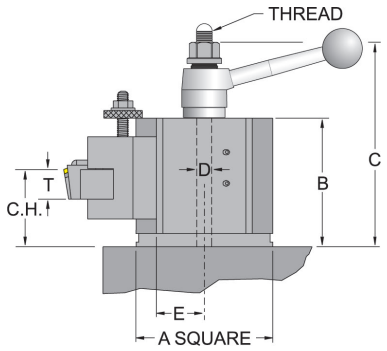

Part Number	QITP25N		QITP30N		QITP35N		QITP40N		QITP50N		QITP60N	
UPC No. 733101-	00000		00002		00004		00006		00008		00010	
System	in	mm	in	mm	in	mm	in	mm	in	mm	in	mm
Lathe Swing Over Bed	≤12"	≤300,0	13-15"	320,0	14-17"	400,0	16-20"	450,0	17-32"	500,0	≥25-XHD	XHD
A	2.500	63	3.000	76	3.500	88	4.000	101	5.000	126	6.000	152
B	2.570	65.3	3.205	81.4	3.460	87.9	4.070	103.4	5.230	132.8	5.615	142.6
C	5.210	132.3	5.720	145.3	6.415	162.9	7.525	191.1	9.135	232.0	9.855	250.3
D	0.500	12.7	0.500	12.7	0.625	16.0	0.750	19.0	1.000	25.40	1.125	28.6
E	0.880	22.4	1.115	28.3	1.245	31.6	1.530	38.9	1.897	48.2	2.207	56.1
T-Tool Capacity	3/8-3/4	10-20	1/2-1.0	12-25	3/4-1.0	20-25	1.0-1¼	25-32	1¼ - 1½	32-40	1 ½	40.0
Optimum C.H.*	1.422	36.1	1.747	44.4	1.835	46.6	2.202	55.9	2.995	76.1	3.440	87.4
C.H. MIN.	0.995	25.3	1.213	30.8	1.445	36.7	1.757	44.6	2.245	57.0	2.750	69.9
C.H. MAX.	1.849	50.0	2.282	58.0	2.225	56.5	2.646	67.2	3.744	95.1	4.129	104.9
Thread	1/2-20	M12x1,75	1/2-20	M12x1,75	5/8-18	M16x2,0	3/4-16	M18x2,5	1.0-14	M24x3,0	1⅛-12	M27x3,0

*Optimum center height is calculated with the smaller tool System of the tool capacity.

No. QITPN-1 Turning & Facing Toolholder

This Toolholder is best used for holding square shank Cutting Tools close to the Tool Post to maximize Rigidity, Stability & Performance, in turning, facing, and threading Operations.

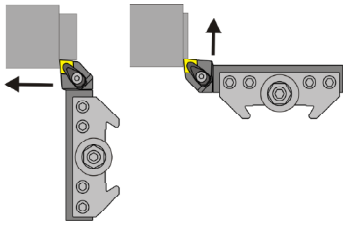

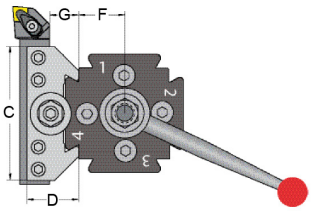

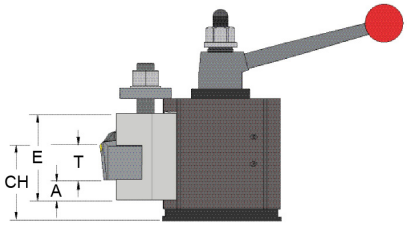

Part Number	UPC No.733101-	System	A	T	C	D	E	F	G	CH	
										Min. CH	Max. CH
QITP25N-1	00100	in	0.375	0.750	2.750	1.210	1.710	0.880	0.760	0.850	1.985
		mm	9.53	20.00	69.85	30.73	43.43	22.35	19.30	21.59	50.42
QITP30N-1	00250	in	0.437	1.000	3.250	1.460	2.210	1.115	0.860	1.092	2.432
		mm	11.10	25.00	82.55	37.08	56.13	28.32	21.84	27.74	61.77
QITP35N-1	00400	in	0.500	1.000	3.750	1.710	2.460	1.245	0.980	1.450	2.500
		mm	12.70	25.00	95.25	43.43	62.48	31.62	24.89	36.83	63.50
QITP40N-1	00550	in	0.562	1.250	4.500	1.960	2.960	1.530	1.010	1.762	2.922
		mm	14.27	32.00	114.30	49.78	75.18	38.86	25.65	44.75	74.22
QITP50N-1	00700	in	0.750	1.500	6.000	2.460	3.460	1.900	1.290	2.250	4.020
		mm	19.05	40.00	152.40	62.48	87.88	48.26	32.77	57.15	102.11
QITP60N-1	00850	in	1.000	1.500	7.000	2.960	3.960	2.213	1.540	2.755	4.155
		mm	25.40	40.00	177.80	75.18	100.58	56.21	39.12	69.98	105.54

No. QITPN-2 Turning, Facing & Boring Toolholder

The "V" groove makes this Toolholder more versatile, to hold either square shank Cutting Tools or Boring Bars, held close to the Tool Post to maximize Rigidity, Stability & Performance in turning, facing, threading and boring Operations.

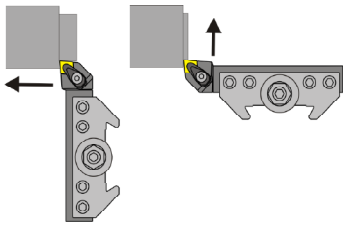

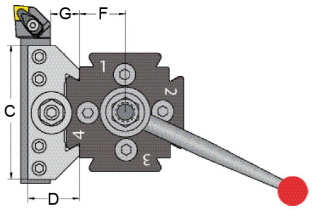

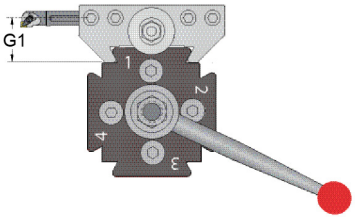

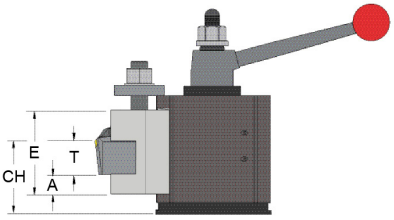

Part Number	UPC No.733101-	System	A	T	C	D	E	F	G	G1	CH	
											Min. CH	Max. CH
QITP25N-2	00104	in	0.375	0.750	2.750	1.210	1.710	0.880	0.760	1.000	0.850	1.985
		mm	9.53	20.00	69.85	30.73	43.43	22.35	19.30	25.40	21.59	50.42
QITP30N-2	00254	in	0.437	1.000	3.250	1.460	2.210	1.115	0.860	1.180	1.09	2.43
		mm	11.10	25.00	82.55	37.08	56.13	28.32	21.84	29.97	27.74	61.77
QITP35N-2	00404	in	0.500	1.000	3.750	1.710	2.460	1.245	0.980	1.380	1.450	2.500
		mm	12.70	25.00	95.25	43.43	62.48	31.62	24.89	35.05	36.83	63.50
QITP40N-2	00554	in	0.562	1.250	4.500	1.960	2.960	1.530	1.010	1.545	1.762	2.922
		mm	14.27	32.00	114.30	49.78	75.18	38.86	25.65	39.24	44.76	74.22
QITP50N-2	00704	in	0.750	1.500	6.000	2.460	3.460	1.900	1.290	1.950	2.250	4.020
		mm	19.05	40.00	152.40	62.48	87.88	48.26	32.77	49.53	57.15	102.11
QITP60N-2	00854	in	1.000	1.500	7.000	2.960	3.960	2.213	1.540	2.270	2.755	4.155
		mm	25.40	40.00	177.80	75.18	100.58	56.21	39.12	57.66	69.98	105.54

No. QITPN-4-DUAL Heavy Duty Boring Bar Toolholder

This Toolholder with DUAL Locking System, is best used for holding Round Tools and Boring Bars with or without flats. The Boring Bar, is locked 360° around the Diameter in the Toolholder. The DUAL locking System will fuse the Boring Bar with the Toolholder in One Unit, achieving the best possible Boring Operation for Rigidity, Stability & Performance.

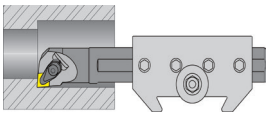

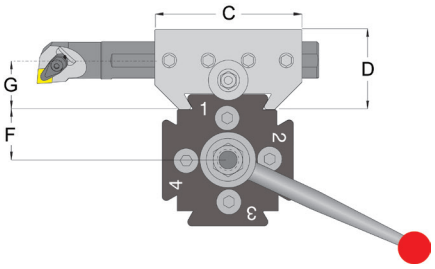

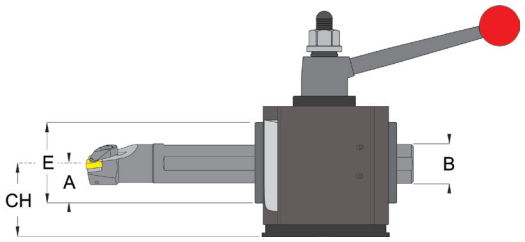

Part Number	UPC No.733101-	A	B Boring Bar Capacity	C	D	E	F	G	CH Min. CH	CH Max. CH
Inch Toolholders										
QITP25N-4-750-DUAL	**00111**	0.740	0.750	2.750	1.480	1.480	0.880	0.937	0.840	1.830
QITP30N-4-1000-DUAL	**00261**	0.980	1.000	3.250	1.960	1.960	1.115	1.250	1.135	2.225
QITP35N-4-1000-DUAL	**00411**	1.105	1.000	3.750	2.210	2.210	1.245	1.375	1.305	2.355
QITP40N-4-1250-DUAL	**00561**	1.230	1.250	4.500	2.460	2.460	1.530	1.500	1.430	2.840
QITP50N-4-1500-DUAL	**00711**	1.480	1.500	5.500	2.960	2.960	1.900	1.875	1.730	3.750
QITP60N-4-2000-DUAL	**00861**	1.980	2.000	6.500	3.960	3.960	2.213	2.375	2.235	3.635
Metric Toolholders										
QITP25N-4M-20-DUAL	**00113**	18.80	20.00	69.85	37.59	37.59	22.35	23.80	21.34	46.48
QITP30N-4M-25-DUAL	**00263**	24.89	25.00	82.55	49.78	49.78	28.32	31.75	28.83	56.52
QITP35N-4M-25-DUAL	**00419**	28.07	25.00	95.25	56.13	56.13	31.62	34.93	33.15	59.82
QITP40N-4M-32-DUAL	**00567**	31.24	32.00	114.30	62.48	62.48	38.86	38.10	36.32	72.14
QITP50N-4M-40-DUAL	**00717**	37.59	40.00	139.70	75.18	75.18	48.26	47.63	43.94	95.25
QITP60N-4M-50-DUAL	**00867**	50.29	50.00	165.10	100.58	100.58	56.21	63.50	56.77	92.33

No. QITPN-41-DUAL Universal Extra Heavy Duty Boring Bar Toolholder

This Toolholder with DUAL Locking System, is best used for holding Round Tools and Boring Bars with or without flats. The Boring Bar is locked 360° around the Diameter in the Toolholder. The DUAL locking System will fuse the Boring Bar with the Toolholder in One Unit, achieving the best possible Boring Operation for Rigidity, Stability & Performance.

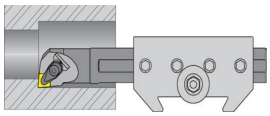

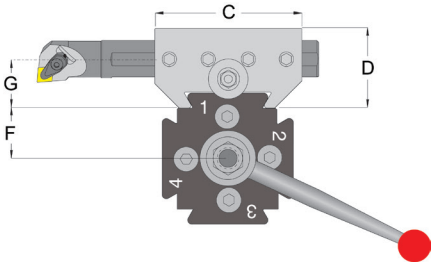

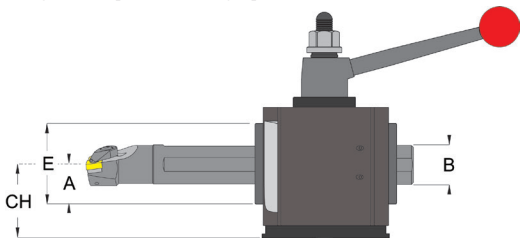

Part Number	UPC No.733101-	A	B Boring Bar Capacity	C	D	E	F	G	CH Min. CH	CH Max. CH
Inch Toolholders										
QITP35N-41-1250-DUAL	**00413**	1.105	1.250	3.750	2.210	2.210	1.245	1.375	1.305	2.355
QITP40N-41-1500-DUAL	**00563**	1.355	1.500	4.500	2.710	2.710	1.530	1.625	1.555	2.715
QITP50N-41-2000-DUAL	**00713**	1.730	2.000	5.500	3.460	3.460	1.900	2.060	1.980	3.500
QITP60N-41-2500-DUAL	**00863**	2.230	2.500	6.500	4.460	4.460	2.213	2.750	2.485	3.385
Metric Toolholders										
QITP35N-41M-32-DUAL	**00421**	28.07	32.00	95.25	56.13	56.13	31.62	34.93	33.15	59.82
QITP40N-41M-40-DUAL	**00569**	34.42	40.00	114.30	68.83	68.83	38.86	41.28	39.50	68.96
QITP50N-41M-50-DUAL	**00719**	43.94	50.00	139.70	87.88	87.88	48.26	52.32	50.29	88.90
QITP60N-41M-60-DUAL	**00869**	56.64	60.00	165.10	113.28	113.28	56.21	69.85	63.12	85.98

No. QITPN-41S-DUAL Universal Super Over Sized Boring Bar Toolholder

This Toolholder with DUAL Locking System, is best used for holding Round Tools and Boring Bars with or without flats. The Boring Bar is locked 360° around the Diameter in the Toolholder. The DUAL locking System will fuse the Boring Bar with the Toolholder in One Unit, achieving the best possible Boring Operation for Rigidity, Stability & Performance.

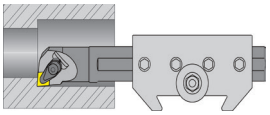

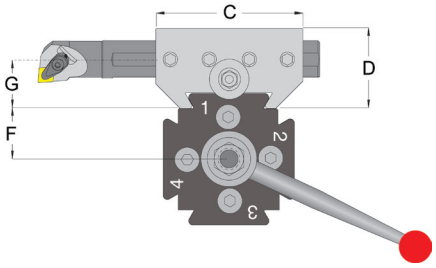

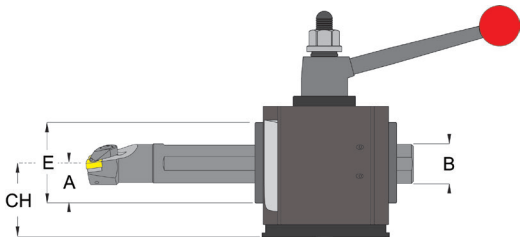

Part Number	UPC No.733101-	A	B Boring Bar Capacity	C	D	E	F	G	CH Min. CH	CH Max. CH
Inch Toolholders										
DQ35CXA-41S-1500-DUAL	**00415**	1.230	1.500	4.000	2.460	2.460	1.245	1.500	1.430	2.230
DQ40CA-41S-2000-DUAL	**00565**	1.480	2.000	4.500	2.960	2.960	1.530	1.675	1.680	2.590
DQ50DA-41S-2500-DUAL	**00715**	1.980	2.500	6.500	3.960	3.960	1.900	2.250	2.230	3.250
DQ60EA-41S-3000-DUAL	**00865**	2.230	3.000	7.000	4.460	4.460	2.213	2.625	2.485	3.385
Metric Toolholders										
DQ35CXA-41SM-40-DUAL	**00423**	32.39	40.00	101.60	62.48	62.48	31.62	38.10	37.47	55.49
DQ40CA-41SM-50-DUAL	**00571**	37.59	50.00	114.30	75.18	75.18	38.86	42.55	42.67	65.79
DQ50DA-41SM-60-DUAL	**00721**	50.29	60.00	165.10	100.58	100.58	48.26	57.15	56.64	82.55
DQ60EA-41SM-80-DUAL	**00871**	58.55	80.00	177.80	113.28	113.28	56.21	66.68	65.03	84.07

No. QITPN-5 Morse Taper Toolholder

This Toolholder is best used for holding Morse Taper Cutting Tools, for heavy drilling, boring, reaming and tapping.

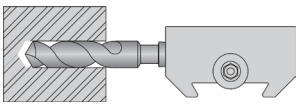

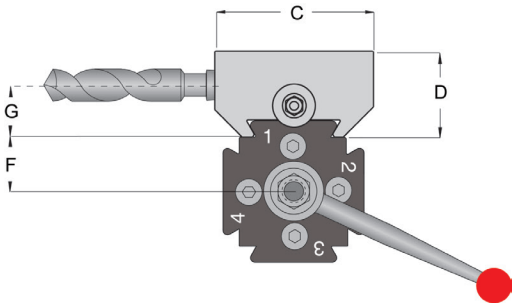

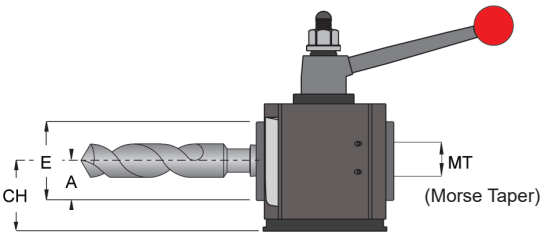

Part Number	UPC No. 733101-	System	A	Morse Taper	C	D	E	F	G	CH Min. CH	CH Max. CH
QITP35N-5-4	**00424**	in	1.230	MT4	4.250	2.460	2.460	1.245	1.615	1.430	2.230
		mm	31.24	MT4	107.95	62.48	62.48	31.62	41.02	36.32	56.64
QITP40N-5-4	**00572**	in	1.230	MT4	4.500	2.460	2.460	1.530	1.615	1.430	2.840
		mm	31.24	MT4	114.30	62.48	62.48	38.86	41.02	36.32	72.14
QITP50N-5-5	**00722**	in	1.730	MT5	5.625	3.460	3.460	1.900	2.300	1.980	3.500
		mm	43.94	MT5	142.88	87.88	87.88	48.26	58.42	50.29	88.90
QITP60N-5-5	**00872**	in	1.730	MT5	5.625	3.460	3.460	2.213	2.300	1.985	3.885
		mm	43.94	MT5	142.88	87.88	87.88	56.21	58.42	50.42	98.68

No. QITPN-36 5C Collet Toolholder

This holder's wide range of collet adaptability makes this tool ideal for holding drills, taps, chucks, & boring bars.
It holds the tools with extreme rigidity without scarring them. Fits industry standard tool posts.

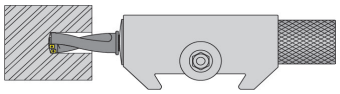

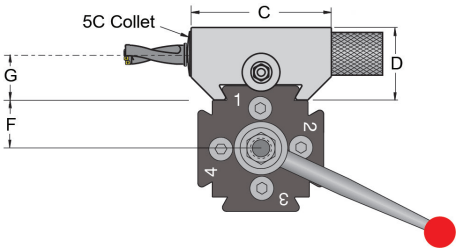

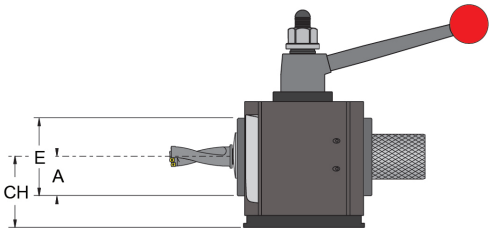

Part Number	UPC No. 733101-	System	A	C	D	E	F	G	CH	
									Min. CH	Max. CH
QITP25N-36	00142	in	1.105	3.250	2.460	2.210	0.880	1.550	1.205	1.465
		mm	28.07	82.55	62.48	56.13	22.35	39.37	30.61	37.21
QITP30N-36	00292	in	1.105	3.250	2.460	2.210	1.115	1.550	1.260	2.100
		mm	28.07	82.55	62.48	56.13	28.32	39.37	32.00	53.34
QITP35N-36	00444	in	1.355	3.500	2.710	2.710	1.245	1.625	1.555	2.105
		mm	34.42	88.90	68.83	68.83	31.62	41.28	39.50	53.47
QITP40N-36	00592	in	1.355	4.000	2.710	2.710	1.530	1.625	1.555	2.715
		mm	34.42	101.60	68.83	68.83	38.86	41.28	39.50	68.96

No. QITPN-7-71C Extra Heavy Duty Cut-Off Blade Toolholder

This holder is best used for holding cut-off blades. It has a taper locking system for maximum rigidity and performance in cut-off and face grooving operations. Fits industry standard tool posts. For Slot Grip Cut-Off and Kool Cut Twin Edge Insert Blades and Inserts see pages 24 - 27.

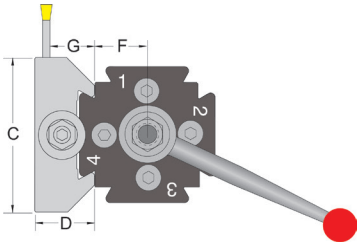

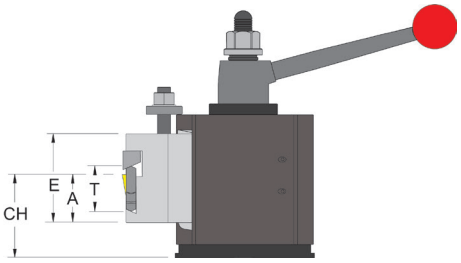

Part Number	UPC No.733101-	System	A	Dual Blade Capacity		C	D	E	F	G	CH	
				Slot Grip Blade	Twin Edge Blade						Min. CH	Max. CH
QITP25N-7-71C	00126	in	0.933	SGIH-19-2	TWECOB-19-2	2.750	1.210	1.960	0.880	1.097	1.033	1.543
		mm	23.70			69.85	30.73	49.78	22.35	27.86	26.24	39.19
QITP30N-7-71C	00276	in	0.933			3.250	1.210	1.960	1.115	1.097	1.088	2.178
		mm	23.70			82.55	30.73	49.78	28.32	27.86	27.64	55.32
QITP35N-7-71C	00428	in	1.250	SGIH-26-2 to 26-6	TWECOB-26-2 to 26-6	3.750	1.710	2.460	1.245	1.490	1.450	2.250
		mm	31.75			95.25	43.43	62.48	31.62	37.85	36.83	57.15
QITP40N-7-71C	00576	in	1.500			4.500	1.710	2.960	1.530	1.490	1.700	2.610
		mm	38.10			114.30	43.43	75.18	38.86	37.85	43.18	66.29
QITP50N-7-71C	00726	in	1.460	SGIH-32-3 to 32-9	TWECOB-32-2 to 32-6	6.000	1.960	2.960	1.900	1.680	1.710	3.730
		mm	37.08			152.40	49.78	75.18	48.26	42.67	43.43	94.74
QITP60N-7-71C	00876	in	2.025			7.000	2.210	3.460	2.213	1.930	2.280	4.180
		mm	51.44			177.80	56.13	87.88	56.21	49.02	57.91	106.17

SLOT GRIP

Positive Stop Blades

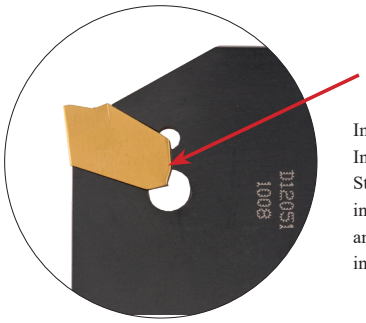

Positive Stop

Improved design featuring a "Positive Stop". Inserts are securely held in Slot Grip Positive Stop Blades by a tapered locking system featuring a "Positive Stop" that prevents insert drift and the blade pocket from spreading once the insert is firmly in place.

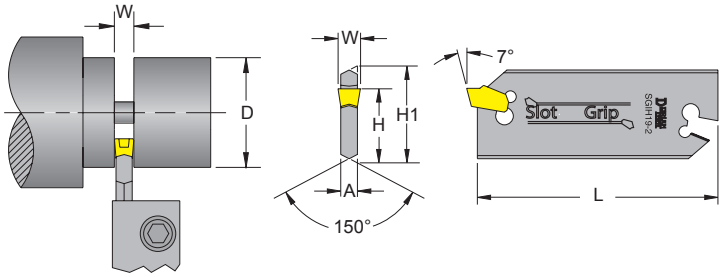

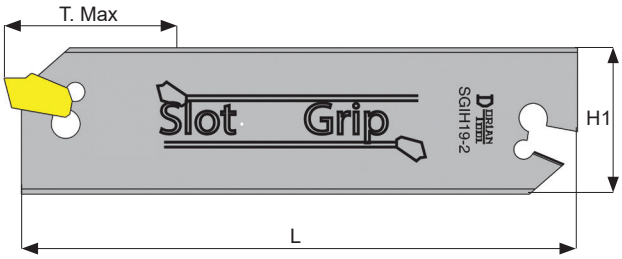

Designed for use with standard SGTN cut-off inserts and standard cut-off blade holders. The insert's cutting edge location repeats accurately and as a result prevents insert splitting under heavy feed and shock loads. The blade and insert geometry allows free chip flow, minimizing insert breakage due to chip build-up.

19mm (3/4") Slot Grip Blades

Blades Part Number	UPC #	T. Max	A	D	L	H	H1	Insert Part Number	Insert Width
SGIH19-2	**62950**	0.785	0.063	1.570	3.380	0.618	0.750	SGT(N/R/L)-2	.079"

26mm (1") Slot Grip Blades

SGIH26-2	**62951**	1.000	0.063	2.000	4.330	0.842	1.020	SGT(N/R/L)-2	.079"
SGIH26-3	**62952**	1.500	0.094	3.000				SGT(N/R/L)-3	.118"
SGIH26-4	**62953**	1.575	0.125	3.150				SGT(N/R/L)-4	.157"

32mm (1 1/4") Slot Grip Blades

SGIH32-3	**62956**	1.970	0.094	3.940	5.900	0.984	1.250	SGT(N/R/L)-3	.118"
SGIH32-4	**62957**	1.970	0.125	3.940				SGT(N/RL)-4	.157"
SGIH32-5	**62958**	2.355	0.156	4.710				SGT(N/R/L)-5	.197"
SGIH32-6	**62959**	2.355	0.203	4.710				SGT(N/R/L)-6	.236"
SGIH32-8	**62960**	2.755	0.268	5.510				SGT(N/R/L)-8	.315"
SGIH32-9	**62961**	2.755	0.312	5.510				SGT(N/R/L)-9	.354"

SLOT GRIP

SG_ Inserts for Cut-Off & Grooving Operations

SGTN Neutral	SGTR Right Hand	SGTL Left Hand
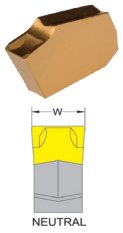	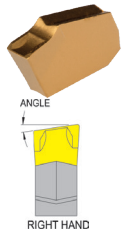	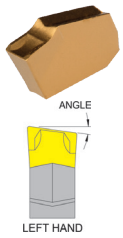

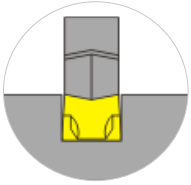

Chip breaker Geometry

- Reduced machining force
- Controlled, coiled chip flow
- Higher material removal rate

Application

- Quickly inserted into adjustable blades
- For cut-off and grooving
- Fair for interrupted cuts

Cut-Off & Grooving

Inserts are designed for use with standard cut-off inserts and standard cut-off blade holders. The insert's cutting edge location repeats accurately and as a result prevents insert splitting under heavy feed and shock loads. The blade and insert geometry permits free chip flow, minimizing insert breakage due to chip build-up.

					Material	Carbon & Alloy Steel	Aluminum & Non-Ferrous Metals & Materials	Carbon & Alloy Steel	300 & 400 Series Stainless Steel	Cast Iron, Copper/Brass	Aluminum & Non-Ferrous Materi-als	High Temp Alloys	Hard Steel to 58 HRC
					Insert Grade	P35	K25 N25	K25 P25 M25					
					Insert Coating	CVD TiN Coated	Uncoated	PVD TiAlN Coated					
Insert Grade	Dimensions					DC656	DK25	DASK25B					
ANSI	Insert Size mm	Lead Angle	Width + 0,05			UPC #	UPC #	UPC #					
			inch	mm									
SGTN-2	2	0º	.087	2		82222	82220	82223					
SGTN-2.4	2,4	0	.094	2,4		82306	82304	82307					
SGTN-3	3	0º	.122	3		82226	82224	82227					
SGTN-4	4	0º	.161	4		82230	82228	82231					
SGTN-4.8	4,8	0	.189	4,8		82318	82316	82319					
SGTN-5	5	0º	.201	5		82234	82232	82235					
SGTN-6	6	0º	.252	6		82238	82236	82239					
SGTN-8	8	0º	.315	8		82242	-	-					
SGTN-9	9	0º	.378	9		82246	82244	82247					
SGTR-2-8	2	8º	.087	2		82250	82248	82251					
SGTR-2.4-8	2,4	8	.094	2,4		82310	82308	82311					
SGTR-3-8	3	8º	.122	3		82254	82252	82255					
SGTR-4-8	4	8º	.161	4		82258	82256	82259					
SGTR-4.8-8	4,8	8	.189	4,8		82322	82320	82323					
SGTR-5-8	5	8º	.201	5		82262	82260	82263					
SGTR-6-8	6	8º	.252	6		82266	-	-					
SGTR-9-8	9	8º	.378	9		82274	-	-					
SGTL-2-8	2	8º	.087	2		82278	82276	82279					
SGTL-4-8	4	8º	.161	4		-	82284	82287					
SGTL-5-8	5	8º	.201	5		82290	-	-					

Twin Edge Blades

- Double Cutting Edge
- High Rigidity
- Better Finish
- Straight Cut

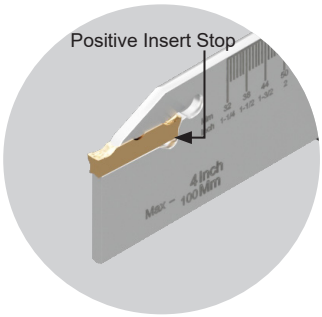

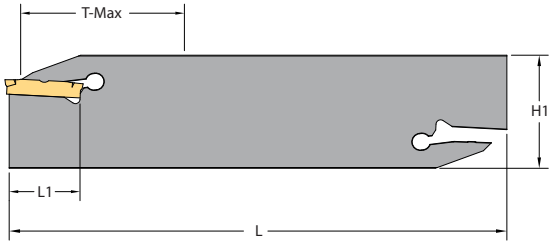

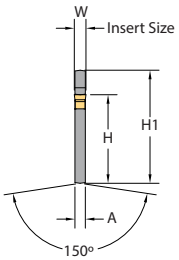

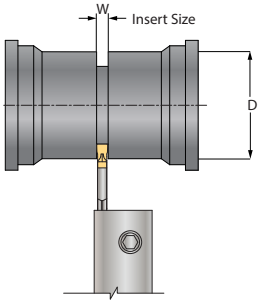

Insert Extraction Key Sold Separately

19mm (3/4") Twin Edge Blades

Blades Part Number	UPC #	T. Max	A	D	L	L1	H	H1	Insert Part Number	Insert Width	Insert Extraction Key Part Number	UPC #
TWECOB-DNTF-19-20	61973	.785	0.063	1.570	3.380	0.866	0.618	0.750	DNTQ-22 2002-3EU-N DNPG-22 2002-1SR-N	0.079	KCIK-DN	61204

26mm (1") Twin Edge Blades

Blades Part Number	UPC #	T. Max	A	D	L	L1	H	H1	Insert Part Number	Insert Width	Insert Extraction Key Part Number	UPC #
TWECOB-DNTF-26-20	61965	1.000	0.063	2.000	4.331	0.866	0.842	1.024	DNTQ-22 2002-3EU-N DNPG-22 2002-1SR-N	0.079	KCIK-DN	61204
TWECOB-DNTF-26-30	61966	1.550	0.094	3.100	4.331	0.866	0.842	1.024	DNTQ-22 3003-3EU-N DNTR-22 3015-3EU-N DNPG-22 3002-1SR-N	0.118		
TWECOB-DNTF-26-40	61967	1.650	0.125	3.300	4.331	0.866	0.842	1.024	DNTQ-25 4004-3EU-N DNTR-25 4020-3EU-N DNPG-25 4003-1SR-N	0.157		

32mm (1 1/4") Twin Edge Blades

Blades Part Number	UPC #	T. Max	A	D	L	L1	H	H1	Insert Part Number	Insert Width	Insert Extraction Key Part Number	UPC #
TWECOB-DNTF-32-20	61968	1.150	0.063	2.300	5.906	0.866	0.984	1.260	DNTQ-22 2002-3EU-N DNPG-22 2002-1SR-N	0.079	KCIK-DN	61204
TWECOB-DNTF-32-30	61969	1.750	0.094	3.500	5.906	0.866	0.984	1.260	DNTQ-22 3003-3EU-N DNTR-22 3015-3EU-N DNPG-22 3002-1SR-N	0.118		
TWECOB-DNTF-32-40	61970	1.950	0.125	3.900	5.906	0.984	0.984	1.260	DNTQ-25 4004-3EU-N DNTR-25 4020-3EU-N DNPG-25 4003-1SR-N	0.157		
TWECOB-DNTF-32-50	61971	2.350	0.157	4.700	5.906	0.984	0.984	1.260	DNTQ-25 5004-3EU-N DNTR-25 5025-3EU-N DNPG-25 5004-1SR-N	0.197		
TWECOB-DNTF-32-60	61972	2.750	0.203	5.500	5.906	0.984	0.984	1.260	DNTQ-25 6004-3EU-N DNPG-25 6004-1SR-N	0.236		

Insert Specification

Double-End
Cutting Edge
DNTQ-N- DUP35UG

Neutral Straight Nose
Multi-Cutting Direction
Right Hand and Left Hand

Cutting Data

Insert Dimension			Maximum a_p Depth of Cut for Turning	Maximum f_n Feed Rate for Turning, Grooving and Parting-off
Width	**Length**	**Corner Radius**	**Inch**	**in/rev.**
.079” (2mm)	.866”	.008"	.039”	.006 in/rev
.118” (3mm)	.866”	.012"	.059”	.008 in/rev
.157” (4mm)	.984”	.016"	.079”	. 009 in/rev

Insert Application

Turning

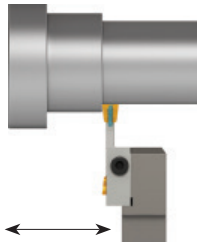

Grooving

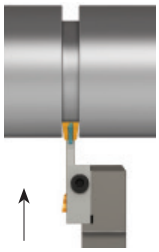

Parting-Off

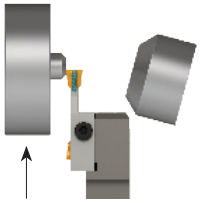

Insert Geometry, Material Application

Steel	Stainless Steel	Cast Iron	Non Ferrous	Super Alloys
●	●	●	○	○

Double-End
Cutting Edge
DNTR-N- DUP35UG

Neutral Round Nose
Multi-Cutting Direction
Right Hand and Left Hand

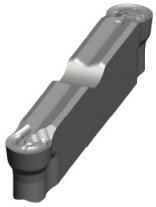

Cutting Data

Insert Dimension			Maximum a_p Depth of Cut for Turning	Maximum f_n Feed Rate for Turning, Grooving and Parting-off
Width	**Length**	**Radius**	**Inch**	**in/rev.**
.118” (3mm)	.866”	.059" (1.5mm)	.059”	.012 in/rev
.157” (4mm)	.984”	.079" (2.0mm)	.079”	.014 in/rev
.197” (5mm)	.984”	.098" (2.5mm)	.098”	.016 in/rev

Profiling

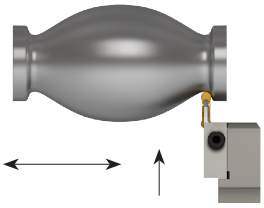

Turning

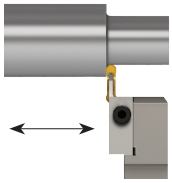

Grooving

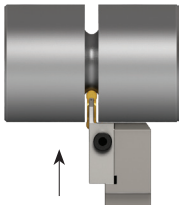

Insert Geometry, Material Application

Steel	Stainless Steel	Cast Iron	Non Ferrous	Super Alloys
●	●	●	○	○

● **First Choice Grade** ○ **Second Best**

Double-End
Cutting Edge
DNPG-N- DPP40SG

Neutral Straight Nose
Uni-Direction Parting Off & Grooving

Cutting Data

Insert Dimension			Maximum f_n Feed Rate for Parting-off
Width	**Length**	**Corner Radius**	**in/rev.**
.079” (2mm)	.866”	.008"	.006 in/rev
.118” (3mm)	.866”	.008"	.008 in/rev
.157” (4mm)	.984”	.012"	.009 in/rev
.197” (5mm)	.984”	.016"	.010 in/rev
.236” (6mm)	.984”	.016"	.012 in/rev

Grooving

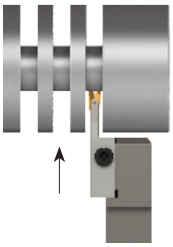

Parting-Off

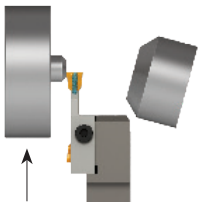

Insert Geometry, Material Application

Steel	Stainless Steel	Cast Iron	Non Ferrous	Super Alloys
●	●			

● **First Choice Grade** ○ **Second Best**

Kool-Cut™ Twin Edge Inserts Ordering Specifications

DUP35UG					
Material		V_c (SFM)			
	Steel	F/min.		m/min.	
P	Carbon Steel	363	627	110	190
	Low Alloy Steel	363	594	110	180
	High Temp Alloys	231	528	70	160
M	Ferritic	396	660	120	200
	Austenitic	330	561	100	170
	Duplex	231	363	70	110
	Martensitic	198	297	60	90
K	Gray Cast Iron	330	660	100	200
	Modular Cast Iron	330	594	100	180
	Malleable Cast Iron	264	528	80	160
N	Unleaded Copper	373	825	113	250
	Brass	663	1472	201	446
	Unleaded Bronze	287	495	87	150
S	Iron Base	86	172	26	52
	Nickel Base	53	116	16	35
	Titanium	198	429	60	130

DPP40SG					
Material		V_c (SFM)			
	Steel	F/min.		m/min.	
P	Carbon Steel	264	495	80	150
	Low Alloy Steel	231	396	70	120
	High Temp Alloys	198	330	60	100
M	Ferritic	330	594	100	180
	Austenitic	264	495	80	150
	Duplex	231	363	70	110
	Martensitic	198	297	60	90
K	Gray Cast Iron	264	561	80	170
	Modular Cast Iron	297	495	90	150
	Malleable Cast Iron	231	462	70	140
N	Unleaded Copper				
	Brass				
	Unleaded Bronze				
S	Iron Base				
	Nickel Base				
	Titanium				

DUP35UG	HC-P25/M25 K30 N30 S30	Coated	PVD-TiAlN 4µm
Insert Characteristics	Hard, Wear, Abrasive and Impact Resistant		
First Choice Application	Universal Multi Purpose Turning and Grooving Application; for carbon steel, alloy steel, stainless steel, cast iron, high-temp alloys & non-ferrous materials		
Cutting Speed SFM (Vc)	High Cutting Speed in stable turning and grooving conditions, light interrupted cut		
Cutting Condition	Wet		

DPP40SG	HC-P45/M45	Multi Coated	PVD-TiAlN 7µm
Insert Characteristics	Extremely Tough and Impact Resistant Substrate		
First Choice Application	For Heavy or Interrupted Part Off and Grooving Applications; for Forgings and Castings of Carbon Steel, Alloy Steel, Stainless Steel and Cast Iron		
Cutting Speed SFM (Vc)	Low to Medium Cutting Speed in unstable conditions and heavy interrupted cut		
Cutting Condition	Wet		

Insert Specifications

"T" Square Nose

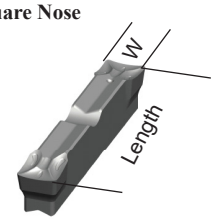

UPC #	Application	Part Number	Insert Size Width	Insert Size Length	Corner Radius	Grade DUP35UG
82440	Turning Grooving Parting-Off	DNTQ-22 2002-3EU-N DUP35UG	.079" (2mm)	.866"	.008"	•
82442		DNTQ-22 3003-3EU-N DUP35UG	.118" (3mm)	.866"	.012"	•
82443		DNTQ-25 4004-3EU-N DUP35UG	.157" (4mm)	.984"	.016"	•
82444		DNTQ-25 5004-3EU-N DUP35UG	.197" (5mm)	.984"	.016"	•
82445		DNTQ-25 6004-3EU-N DUP35UG	.236" (6mm)	.984"	.016"	•

"R" Round Nose

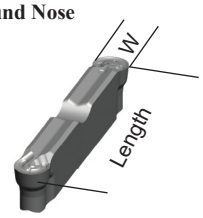

UPC #	Application	Part Number	Insert Size Width	Insert Size Length	Radius	Grade DUP35UG
82458	Profiling Turning Grooving	DNTR-22 2010-3EU-N-DUP35UG	.079" (2mm)	.866"	.039" (1mm)	•
82459		DNTR-22 3015-3EU-N DUP35UG	.118" (3mm)	.866"	.059" (1.5mm)	•
82460		DNTR-25 4020-3EU-N DUP35UG	.157" (4mm)	.984"	.079" (2.0mm)	•
82461		DNTR-25 5025-3EU-N DUP35UG	.197" (5mm)	.984"	.098" (2.5mm)	•

"G" Square Nose

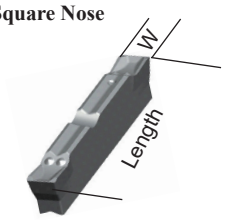

UPC #	Application	Part Number	Insert Size Width	Insert Size Length	Corner Radius	Grade DPP40SG
82475	Grooving Parting-Off	DNPG-22 2002-1SR-N DPP40SG	.079" (2mm)	.866"	.008"	•
82476		DNPG-22 3002-1SR-N DPP40SG	.118" (3mm)	.866"	.008"	•
82477		DNPG-25 4003-1SR-N DPP40SG	.157" (4mm)	.984"	.012"	•
82478		DNPG-25 5004-1SR-N DPP40SG	.197" (5mm)	.984"	.016"	•
82479		DNPG-25 6004-1SR-N DPP40SG	.236" (6mm)	.984"	.016"	•

No. QITPN-881 O.D. and I.D. Threading Toolholder

This holder is capable of covering all threading requirements. It uses standard carbide inserts. The holder is supplied with a cartridge for external threading. Fits industry standard tool posts.

O.D. Threading Cartridge, for TNMC-32 NV inserts

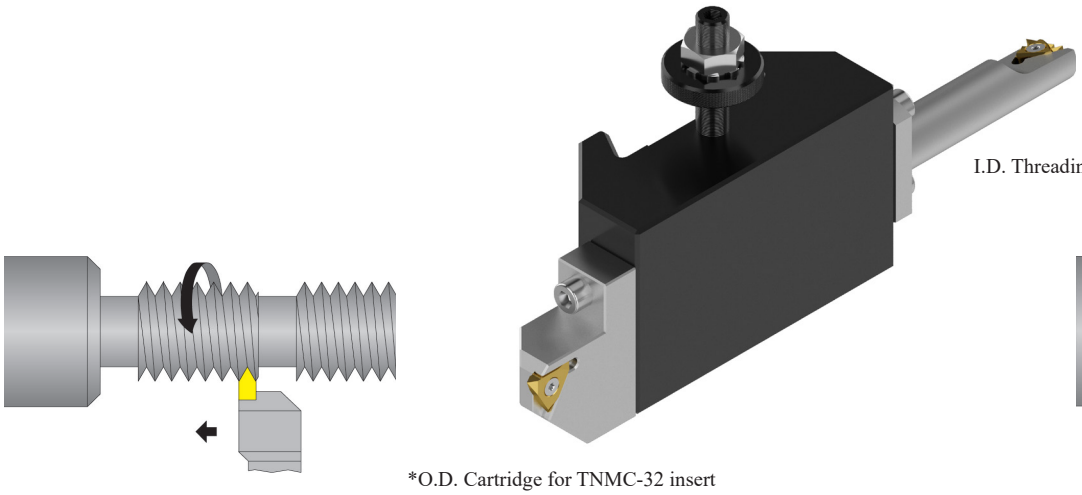

I.D. Threading Bar, for _IR-A60 Lay Down Inserts

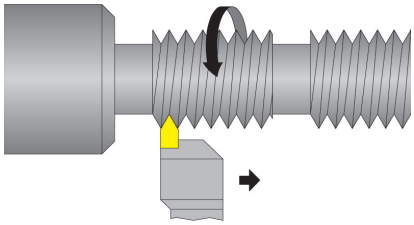

*O.D. Cartridge for TNMC-32 insert

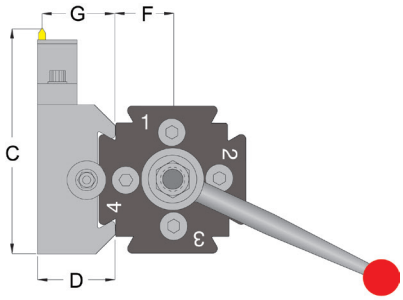

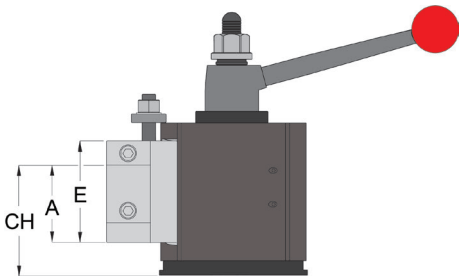

Part Number	UPC No.	System	A	C	D	E	F	G	CH Min. CH	CH Max. CH	*O.D. Cartridge for TNMC-32 insert Part No.	UPC No. 733101-	TNMC Insert	Torx Screw	Torx Key
QITP25N-881-OE	**00132**	in	0.875	4.140	1.210	1.710	0.880	1.263	0.975	1.735	TIH253-32	03621	32	GTS-1M	T-10
		mm	22.23	105.16	30.73	43.43	22.35	32.08	24.77	44.07					
QITP30N-881-OE	**00282**	in	0.875	4.640	1.210	1.710	1.115	1.263	1.030	2.370					
		mm	22.23	117.86	30.73	43.43	28.32	32.08	26.16	60.20					
QITP35N-881-OE	**00434**	in	1.250	5.400	1.460	1.960	1.245	1.398	1.450	2.750	TIH354-32	03623	32	GTS-1M	T-10
		mm	31.75	137.16	37.08	49.78	31.62	35.51	36.83	69.85					
QITP40N-881-OE	**00582**	in	1.500	6.150	1.710	2.460	1.530	1.648	1.700	3.110					
		mm	38.10	156.21	43.43	62.48	38.86	41.86	43.18	78.99					

* Holder is supplied standard with External On Edge Insert Cartridge.
Internal threading bar sold separately. Inserts not included.

Internal Threading Bar For QITPN-881 Toolholder

This cartridge is to be used on the #881 holder. It is used for internal threading with a laydown insert. It can be mounted on either end of the base holder.

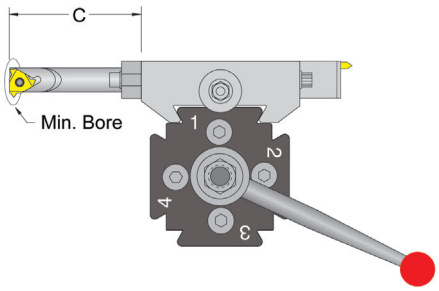

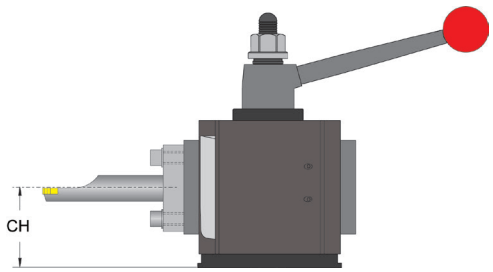

Right Hand

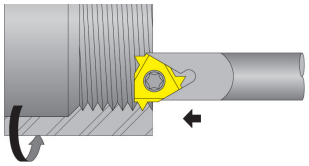

Left Hand

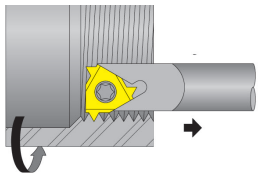

Series	Right Hand			Min. Bore		C		Pitch		Insert I.C.	Torx Screw	Torx Key
	Part No.	UPC	Insert	in	mm	in	mm	TPI	mm			
25,30,35,40	NL50R	03661	11IR-A60	0.500	12,7	2.375	60,3	16-48	0,5-1,5	.250	TS-25.45-6M1	T-8
25,30,35,40	NL75R	03663	16IR-AG60	0.750	19,1	2.875	73,0	8-48	0,5-3,0	.375	TS-16	T-10

Laydown Threading Insert 60° Partial Profile

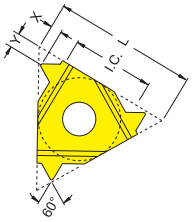

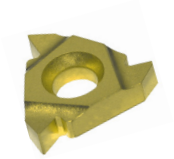

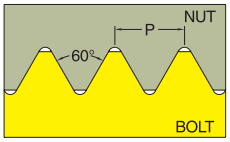

Lay-Down Internal Right Hand					Lay-Down Internal Left Hand					Insert Specification					
Part No.	Grade	UPC	Grade	UPC	Part No.	Grade	UPC	Grade	UPC	L	I.C.	TPI		x	y
11IR-A60	DVP656	74056	DVK10	74057	11IL-A60	DVP656	74060	DVK10	74061	11 mm	0.250	16-48	0,5-1,5	0,8	0,9
16IR-A60		74064		74065	16IL-A60		74068		74069	16 mm	0.375	16-48	0,5-1,5		
16IR-G60		74072		74073	16IL-G60		74076		74077	16 mm	0.375	8-14	1,75-3,0	1,2	1,7
16IR-AG60		74080		74081	16IL-AG60		74084		74085	16 mm	0.375	8-48	0,5-3,0		
	Carbon Steel, Alloy Steel & Stainless Steel		Non Ferrous Metal, Stainless Steel, Aluminium & Cast Iron			Carbon Steel, Alloy Steel & Stainless Steel		Non Ferrous Metal, Stainless Steel, Aluminium & Cast Iron							

On Edge TNMC 60° Negative Rake Threading Insert

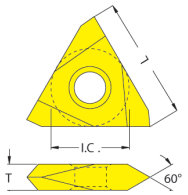

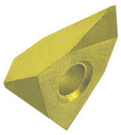

On Edge TNMC 60° Negative Rake Threading Insert					Insert Specification									
Part No.	Grade	UPC	Grade	UPC	I.C.		TPI		T		Hole Dia.		Depth.	
					I.C.	L								
TNMC-32NV-	DVP656	72003	DVK10	72004	0.375	16mm	8-48	0.5-3.0	0.125	3,18	0.150	3,81mm	0.150	3,81mm
	Carbon Steel, Alloy Steel & Stainless Steel		Non Ferrous Metal, Stainless Steel, Aluminium & Cast Iron											

Quadra® First Time Buyer Set

Now with NEW MCLNR & Twin Edge Blade free tooling!

Quadra® Indexing Quick Change Tool Post First Time Buyer Set

Quadra® First Time Buyer SET
Includes FREE TOOLING

Set Includes:
(1) Tool Post
(4) Holders
(4) Toolholders **FREE**
(5) Inserts **FREE**

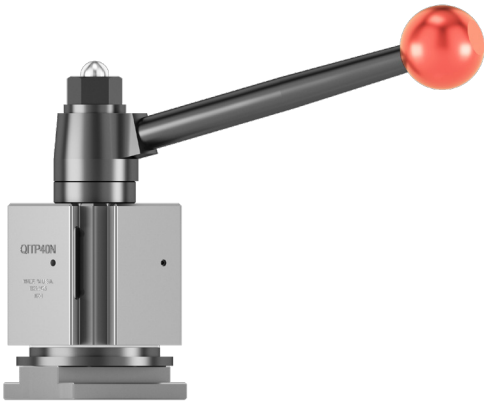

1ea. QITPN-1 + Free MCLNR Turning Toolholder, 1 Free CNMG Turning Insert

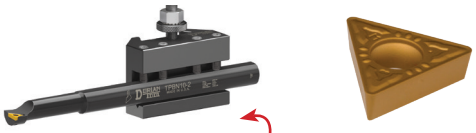

1ea. QITPN-2 + Free Boring Bar, 1 Free TCMT Turning Insert

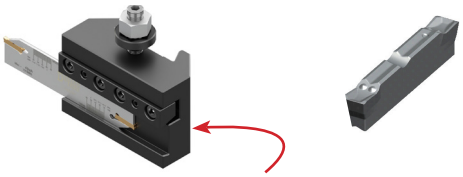

1ea. QITPN-7-71C + Free Twin Edge Blade, 1 Free Double-End Cutting Edge Insert

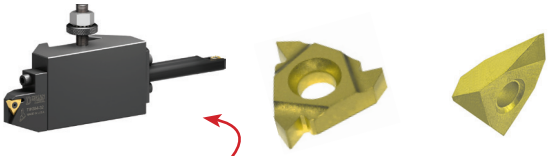

1ea. QITPN-881 + 1 Free ID Threading Bar, 1 Free TNMC On Edge Insert,
1 Free Laydown Internal Threading Insert

Part Number	**QITP25N-FTB**	**QITP30N-FTB**	**QITP35N-FTB**	**QITP40N-FTB**
UPC No. 733101-	**00056**	**00058**	**00060**	**00062**
Lathe Swing	Up to 12”	13" to 15"	14” to 17”	16” to 20”
Set Includes				
(1) Tool Post	QITP25N	QITP30N	QITP35N	QITP40N
(4) Holders No. QITPN-1 Turning & Facing Toolholder No. QITP_N-2 Turning, Facing & Boring Toolholder No. QITPN-7-71C Reversible Cut-Off Blade Toolholder No. QITPN-881 O.D. or I.D. Threading Toolholder	QITP25N-1 QITP25N-2 QITP25N-7-71C QITP25N-881-OE	QITP30N-1 QITP30N-2 QITP30N-7-71C QITP30N-881-OE	QITP35N-1 QITP35N-2 QITP35N-7-71C QITP35N-881-OE	QITP40N-1 QITP40N-2 QITP40N-7-71C QITP40N-881-OE
Free Tooling				
(4)Toolholders Turning Square Shank Boring Bar Cut-Off Blade Threading Bar	MCLNR08-3A STCMB06-2 TWECOB-DNTF-19-20 NL50R	MCLNR10-3A STCMB08-2 TWECOB-DNTF-19-20 NL50R	MCLNR12-4B STCMB10-2 TWECOB-DNTF-26-30 NL75R	MCLNR16-4D STCMB12-3 TWECOB-DNTF-26-30 NL75R
(5) Inserts Turning Insert Turning & Boring Insert Turning & Grooving Insert O.D. Threading Insert I.D. Threading Insert	CNMG-322-PEM-DPC25UT TCMT-21.51-PEM-DPC25UT DNTQ-222002-3EU-DUP35UG TNMC-32NV-DVP656 11IR-A60-DVP656	CNMG-322-PEM-DPC25UT TCMT-21.51-PEM-DPC25UT DNTQ-222002-3EU-DUP35UG TNMC-32NV-DVP656 11IR-A60-DVP656	CNMG-432-PEM-DPC25UT TCMT-21.51-PEM-DPC25UT DNTQ-223003-3EU-DUP35UG TNMC-32NV-DVP656 16IR-A60-DVP656	CNMG-432-PEM-DPC25UT TCMT-32.51-PEM-DPC25UT DNTQ-223003-3EU-DUP35UG TNMC-32NV-DVP656 16IR-A60-DVP656

Quadra® Indexing Quick Change Tool Post Turning Set

Turning Set Includes

(1) Tool Post
(4) Holders

Tooling Not Included

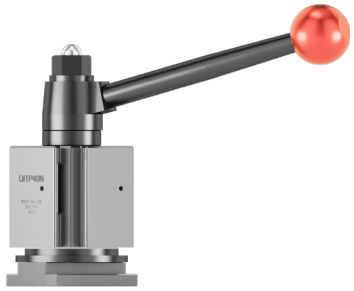

QITPN-1

QITPN-1

QITPN-2

QITPN-2

Part Number	QITP25N-TS	QITP30N-TS	QITP35N-TS	QITP40N-TS	QITP50N-TS	QITP60N-TS
UPC No. 733101-	**00014**	**00015**	**00016**	**00017**	**00018**	**00019**
Lathe Swing	Up to 12”	13" to 15"	14” to 17”	16” to 20”	17” to 32”	≥ 25”
Set Includes						
(1) Tool Post	QITP25N	QITP30N	QITP35N	QITP40N	QITP50N	QITP60N
(4) Holders	(2) QITP25N-1 (2) QITP25N-2	(2) QITP30N-1 (2) QITP30N-2	(2) QITP35N-1 (2) QITP35N-2	(2) QITP40N-1 (2) QITP40N-2	(2) QITP50N-1 (2) QITP50N-2	(2) QITP60N-1 (2) QITP60N-2

Quadra® Indexing Quick Change Tool Post Standard Set

Standard Set Includes

(1) Tool Post
(4) Holders

Tooling Not Included

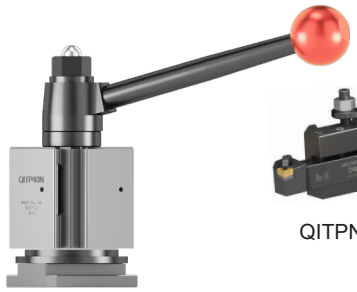

QITPN-1

QITPN-2

QITPN-4-DUAL

QITPN-7-71C

Part Number	QITP25N-INSS	QITP30N-INSS	QITP35N-INSS	QITP40N-INSS	QITP50N-INSS	QITP60N-INSS
UPC No. 733101-	**00020**	**00021**	**00022**	**00023**	**00024**	**00025**
Lathe Swing	Up to 12"	13" to 15"	14" to 17"	16" to 20"	17" to 32"	≥ 25"
Set Includes						
(1) Tool Post	QITP25N	QITP30N	QITP35N	QITP40N	QITP50N	QITP60N
(4) Holders	(1) QITP25N-1 (1) QITP25N-2 (1) QITP25N-4-750-DUAL (1) QITP25N-7-71C	(1) QITP30N-1 (1) QITP30N-2 (1) QITP30N-4-1000-DUAL (1) QITP30N-7-71C	(1) QITP35N-1 (1) QITP35N-2 (1) QITP35N-4-1000-DUAL (1) QITP35N-7-71C	(1) QITP40N-1 (1) QITP40N-2 (1) QITP40N-4-1250-DUAL (1) QITP40N-7-71C	(1) QITP50N-1 (1) QITP50N-2 (1) QITP50N-4-1500-DUAL (1) QITP50N-7-71C	(1) QITP60N-1 (1) QITP60N-2 (1) QITP60N-4-2000-DUAL (1) QITP60N-7-71C

Notes

Super Quick Change Tool Post

Quality
Rigidity
Performance
Repeatability

SDN Tool Post and Toolholders Sizes & Crossover

All the Quadra and SDN Quick Change Toolholders, are built with 4140 Chromium- Molybdenum Height Strength Alloy Steel, for Rigidity, Stability & Performance.

The Toolholders are treated with a Special Low Temperature Heat Treating Process to Protect the Toolholders Surface, while minimizing Cutting Vibrations.

Turning & Facing Toolholders (#1 & #2 Toolholders) are built with a larger tool-seat than the industry's standard, to hold a wider range of oversize Cutting Tools

All the Quadra & SDN Boring Bar Holders feature a DUAL Locking System for Maximum Rigidity, Stability & Performance in Roughing Operations, and High Surface Finish & Close Tolerances for finishing Operations.

SDN
Tool Post

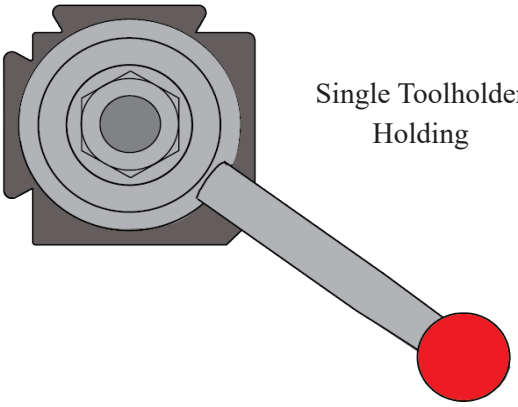

Single Toolholder Holding

SDN
Toolholders

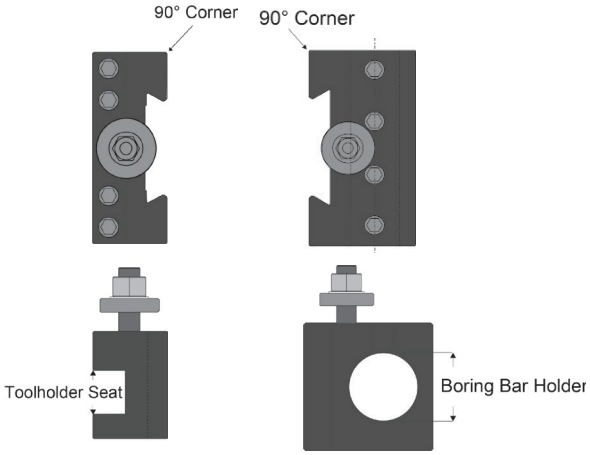

QITP
Tool Post

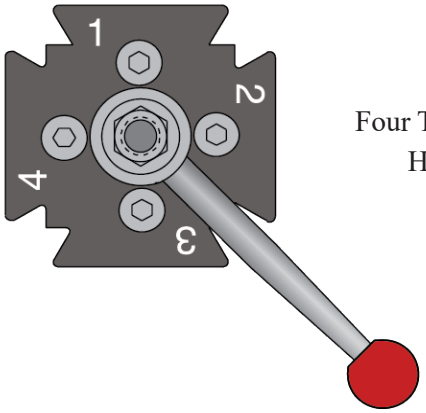

Four Toolholders Holding

QITP
Toolholders

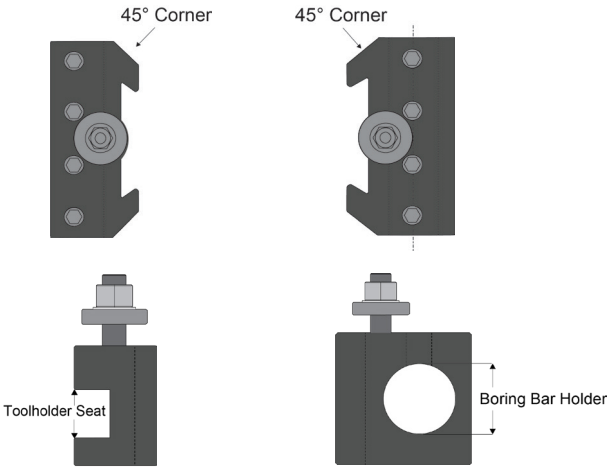

Boring Bar Capacity
See Boring Bar Holder Chart pages 56 to 57

SDN & QITP Crossover		Tool Post Size Nominal Dimension		Toolholder Capacity		Boring Bar Toolholder
Super Quick Change™	Quadra ®	Inch	mm	Inch	mm	
SDN25AXA	QITP25N	2.500	63.5	1/2 - 3/4	12 - 20	See Boring Bar Holders
SDN30BXA	QITP30N	3.000	76.2	5/8 - 1.0	16 - 25	
SDN35CXA	QITP35N	3.500	88.9	3/4 - 1.0	20 - 25	
SDN40CA	QITP40N	4.000	101.60	1.0 - 1 1/4	25 - 32	
SDN50DA	QITP50N	5.000	127.0	1 1/4 - 1 1/2	32 - 40	
SDN60EA	QITP60N	6.000	152.4	1 1/2	40.0	

Turning Operations

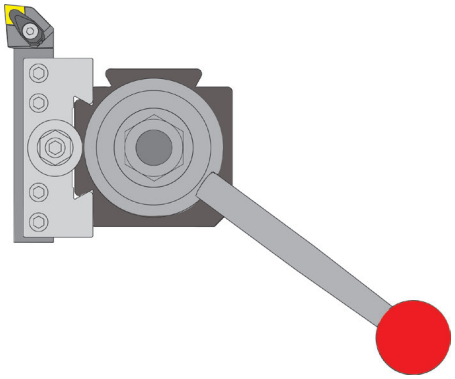

O.D. Threading Operations

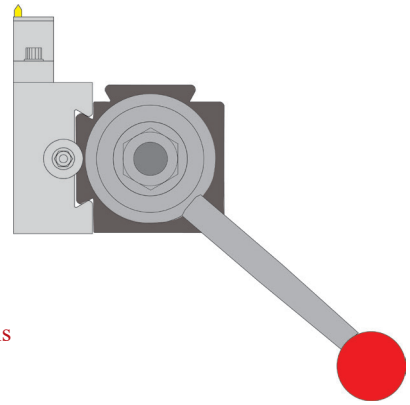

Cut-Off Operations

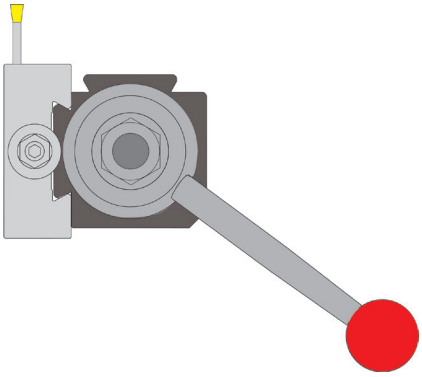

Drilling Operations

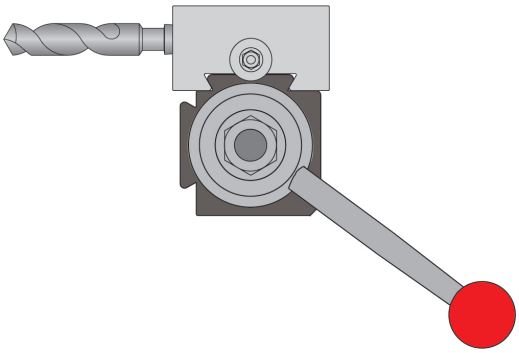

Boring Operations

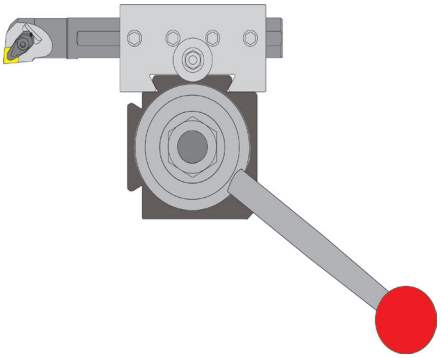

ID Threading Operations

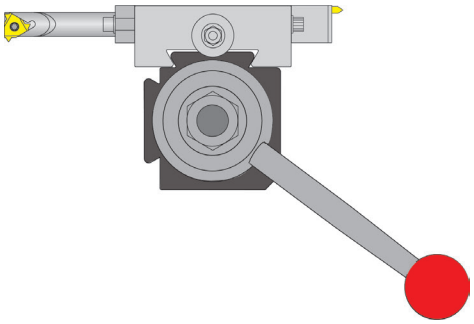

SDN Quick Change Tool Post Cross Section

Holding Post;
The Holding Post, go thru the guide bushing, and threads in to the T-Nut, the flange nut, threads in to the upper end, locking the Tool Post in place.

Flange Nut;
Threads onto the Holding Post to lock the Tool Post in position over the lathe compound

Locking Gear Head;
Engages into the locking gear, and moved by the locking handle to lock and unlock the Toolholder

O-Rings;
To seal the locking system from chips and debris

Tool Post Body;
Is built with AISI 4140 Alloy Steel, a Chromium Molybdenum, Manganese Alloy Steel known for its Toughness, High Fatigue & Torsional Strength. The material is Thru-hardened and Stress Relieved. To Increase wear and fatigue resistance of the Tool Post working surfaces, a Plasma Nitriding process is applied to the Tool Post before grinding, making its life almost endless under any working condition.

Sliding Taper Gibs;
The sliding taper Gibs move up and down with the locking gear, to lock and unlock the Toolholder.

Anti Rotation Pins;
Two Pins are engaged between the Tool Post and the T-Nut, to prevent the Tool Post from rotating under heavy duty cutting operations.

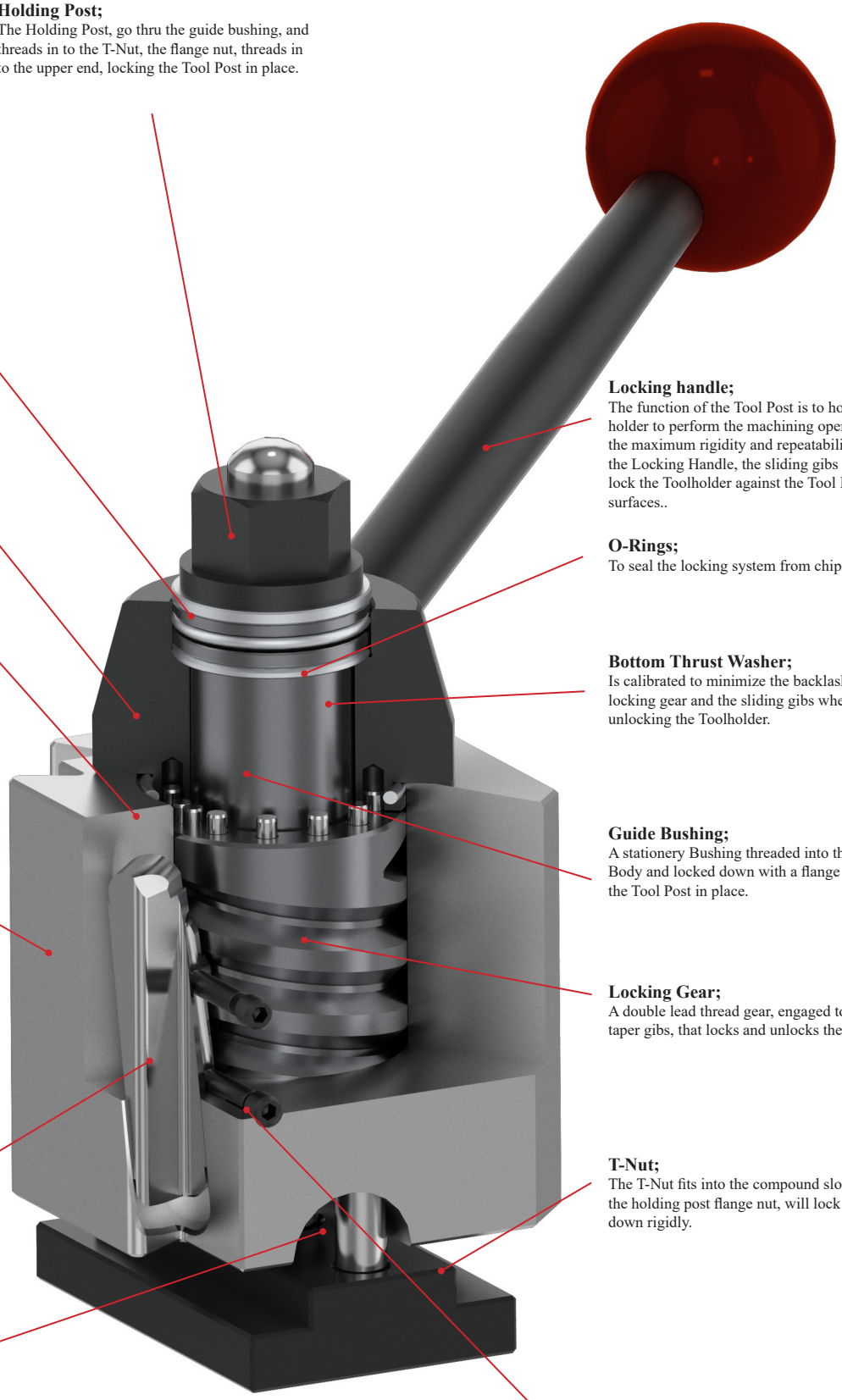

Locking handle;
The function of the Tool Post is to hold a Toolholder to perform the machining operation with the maximum rigidity and repeatability. By pulling the Locking Handle, the sliding gibs will pull and lock the Toolholder against the Tool Post dovetail surfaces..

O-Rings;
To seal the locking system from chips and debris

Bottom Thrust Washer;
Is calibrated to minimize the backlash between the locking gear and the sliding gibs when locking and unlocking the Toolholder.

Guide Bushing;
A stationery Bushing threaded into the tool post Body and locked down with a flange nut to hold the Tool Post in place.

Locking Gear;
A double lead thread gear, engaged to the sliding taper gibs, that locks and unlocks the Toolholder.

T-Nut;
The T-Nut fits into the compound slot, and through the holding post flange nut, will lock the Tool Post down rigidly.

Guiding Pins & Set Screws;
To hold sliding gibs in place.

The Triple Action Wedge-Locking System

is a powerful combination of a downward, outward and inward force simultaneously locking the holder.

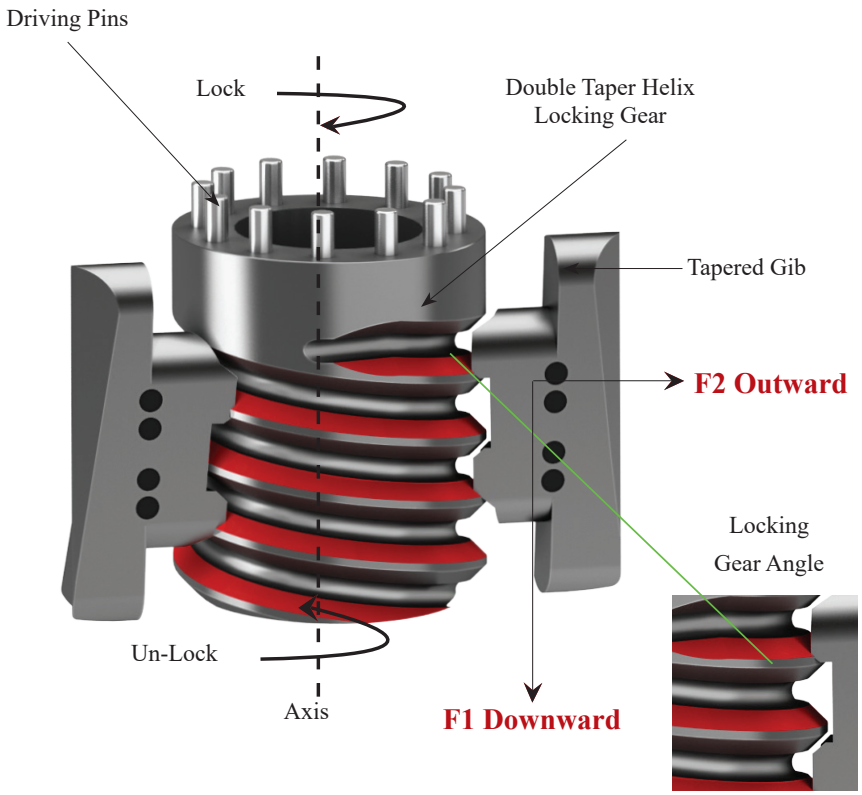

1. F1 Downward Force:

(shown right) Rotating the locking gear moves the gib down, expanding the tool post dovetail to lock the toolholder.

2. F2 Outward Force:

(shown right) When the gibs make full contact with the toolholder dovetail, the double-angle helix of the locking gear forces the gib outward, neutralizing any backlash to zero.

3. F3 Inward Force:

(shown right) The differential between the sliding gib angle and the quick change holder angle pulls the toolholder towards the tool post dovetail surface, creating a one-piece locking effect.

Wedge Style Sliding Gib

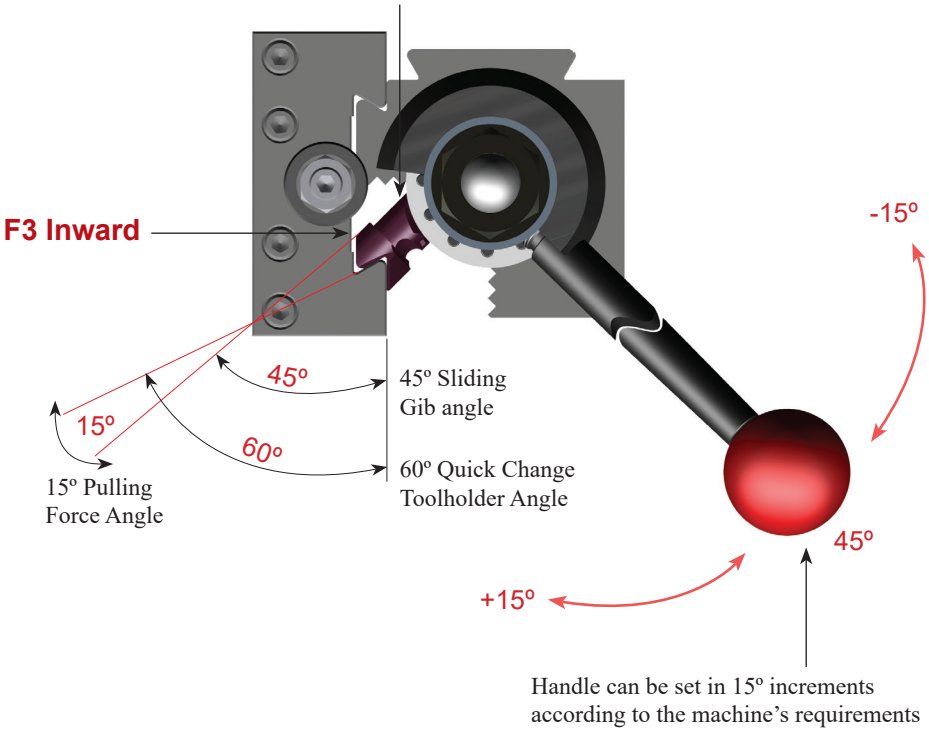

Tool Post Mounting

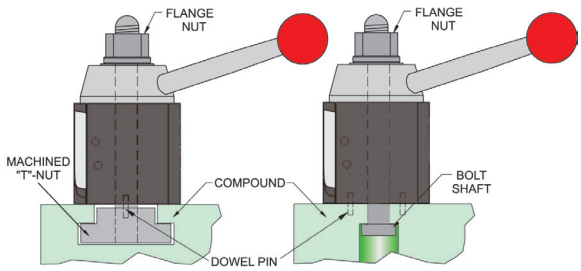

The tool post mounting is accomplished quickly and easily with either a "T" Nut that slides over the lathe compound or a Bolt Shaft. Tightening the Flange Nut will provide a rigid and reliable mounting of the tool post. The "T" Nut is provided blank or machined according to customer specification. Using the Bolt Shaft is the common mounting method on European lathes. Dowel pins are supplied standard to increase tool post mounting rigidity, if tool post shifting is a concern under heavy or interrupted cuts.

Center Height Adjustment

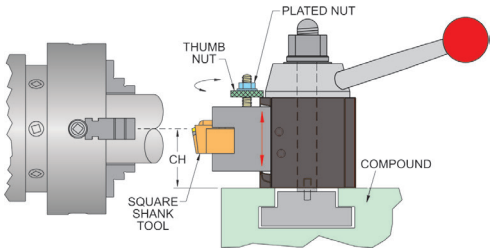

The Center Height Adjustment Assembly allows an easy and accurate adjustment of the cutting tool by rotating the Thumb Nut until the desired height is reached and locking the Plated Nut to preserve it. Maximum center height has been reached when the top of the holder is flush with the top of the tool post body. Minimum center height has been reached when the bottom of the holder is flush with the top of the compound.

Indicating Position

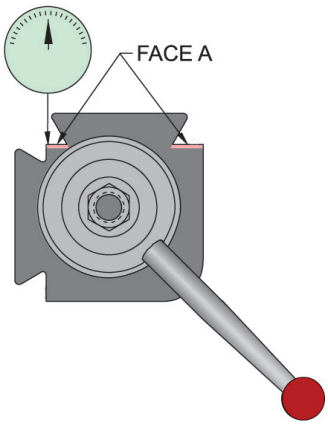

The double dovetails are ground at 90° square (± .0005"). When mounting, it is necessary that Face "A" is set parallel to the lathe axis with an indicator in order for drills to work properly. The holder is slid over the tool post dovetail and locked with the handle. The surfaces in contact must be kept clean and lubricated at all times to prevent misalignment of the tool and loss of the tool post repeatability and rigidity. Also, whenever the drilling operation produces vibration, the parallelism of the tool post must be checked and kept within ± .0005".

Locking Handle Positioning

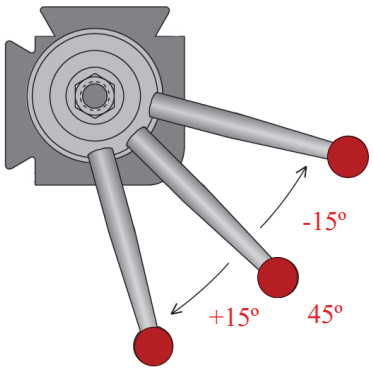

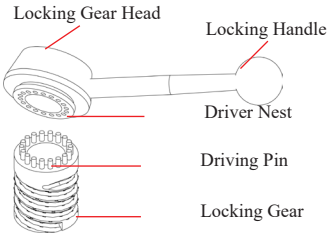

To change the position of the handle: remove the *flange nut; remove the *guide bushing; pull the locking gear head and place to the desired position.

The locking handle will be at a 45º position when the holder is locked; however it is adjustable in 15º increments according to the machine requirements, to clear the machine tail stock, the safety door, or the machine safety guard.

O.D. Turning Operations

Turning, Threading, Cut-Off, Grooving, & Chamfering

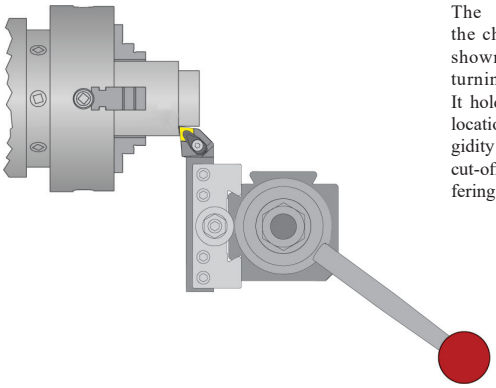

The dovetail closest to the chuck (left dovetail as shown below) is used for turning outside diameters. It holds the tool at the best location for clearance and rigidity for turning, threading, cut-off, grooving, and chamfering.

I.D. Turning Operations

Boring, Threading, Grooving, Drilling, & Center Drilling

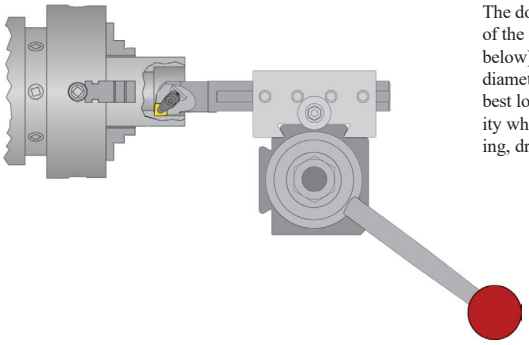

The dovetail closest to the center of the chuck (top dovetail as shown below) is used for turning inside diameters. It holds the tool at the best location for clearance and rigidity when boring, threading, grooving, drilling, and center drilling.

SDN Quick Change Tool Post Cutting Tool Center Height Set-Up

Factors that determine the proper Tool Post for a specific lathe:

1. Lathe Swing
2. Tool Center Height
3. Tool Size
4. Tool Post Mounting type
5. Motor Horse power
6. Maximum Chuck RPM
7. Type of Lathe
8. Type of Work
9. Prototype or Production
10. Light Duty Work
11. Heavy Duty Work

How to measure Tool Center Height "C.H."

"CH" = Center Height is measured from top of compound to lathe center line
"P" = Toolholder bottom lip
"B" = Tool Post Height *(See page 46)*
"E" = Tool Post Toolholder Height
"T" = Turning Toolholder shank size

Optimum
Center Height

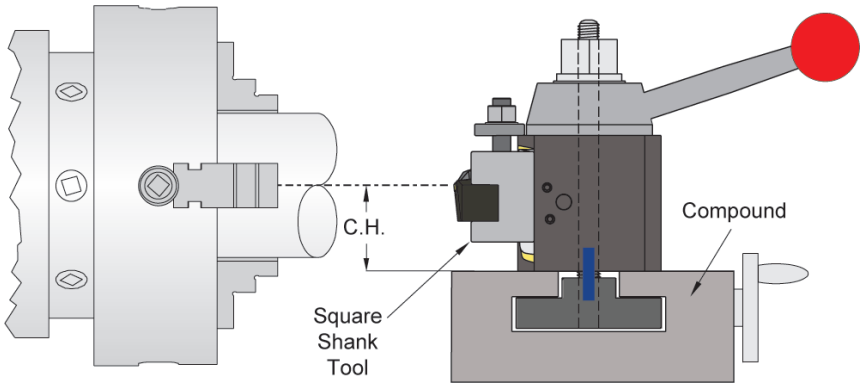

Tool Post Mounting Technical Notes

Mount the Tool Post T-Nut into the Compound

For Best Rigidity Install Anti Rotation Pins.

Set the Tool Post parallel with the Lathe Bed way

Tighten the Flange Nut to Lock Tool Post Properly.

Minimum
Center Height

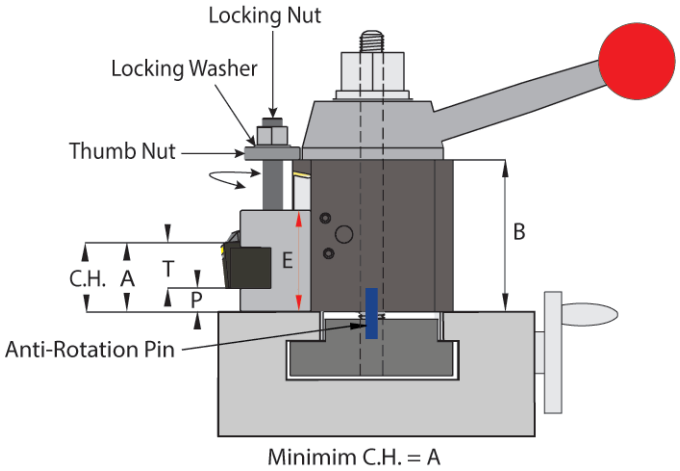

Toolholder Center Height Technical Notes

Place the Toolholder on the Tool post, Loosen the Plated Nut of the Height Adjustment Screw

Turn the Thumb Nut up or down till the Insert tip is centered with the Lathe Center Line.

Lock the Toolholder by pulling on the Locking Handle.

Tighten to lock the Plated Nut against the Thumb Nut

Maximum
Center Height

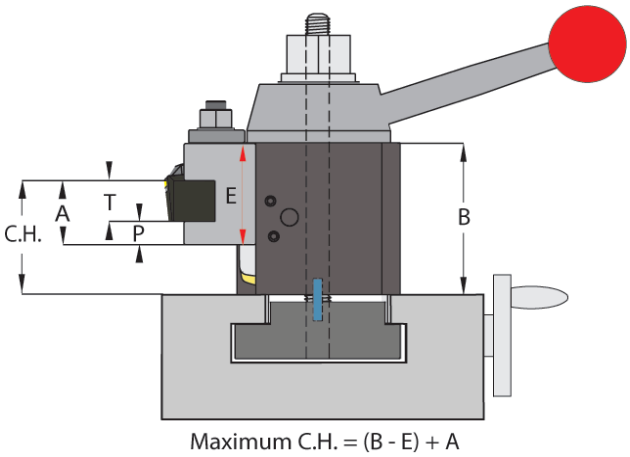

Center Height and Cutting Tool Capacity Technical Notes

The recommended cutting tool size should be used.

The Minimum Center Height, is when the Toolholder is all the way down.

If the Insert is above the Lathe centerline use a Smaller Cutting Tool.

The Maximum Center Height, is when the Toolholder is all the way up.

If the insert is below the Lathe centerline, use a larger Cutting Tool.

American Mounting System

A customized T-Nut is used to Lock Down the Tool Post.
For T-Nut Specifications See page 42

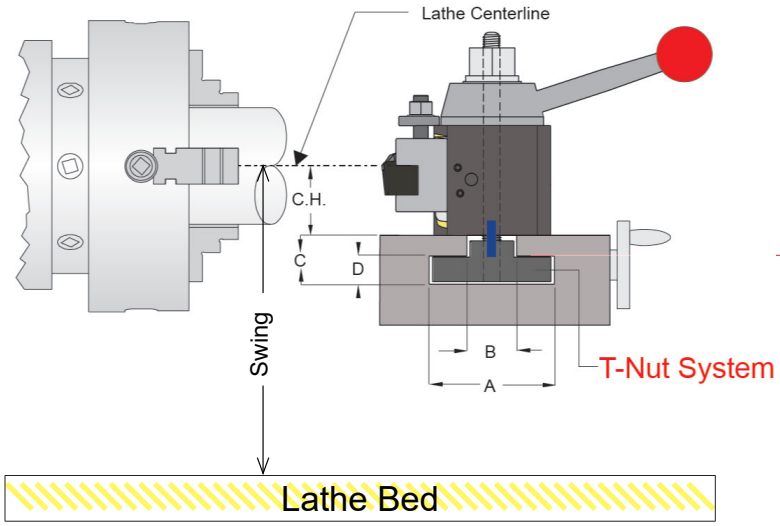

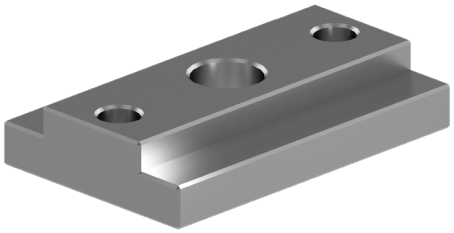

European Mounting System

A customized Bolt-Shaft is used to Lock Down the Tool Post

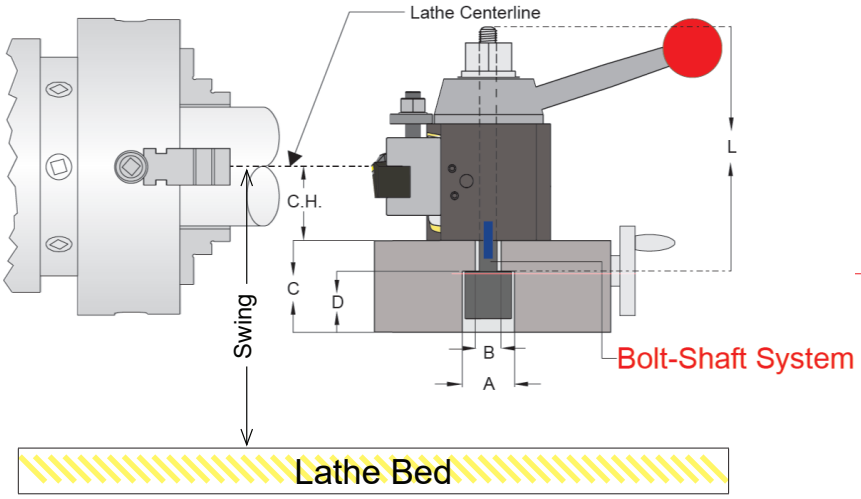

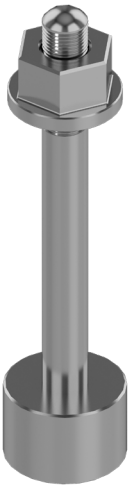

Bolt Shaft non standard item, supplied only on request

Each Tool Post is supplied with a Blank T-Nut or Bolt Shaft that the customer machines to their required dimensions. For custom machined T-Nut or Bolt Shaft, please specify the dimensions A, B, C, and D precise within +/-.003in.

** Please place an X for American or European mounting Style in the boxes above.*

Blank T-Nut

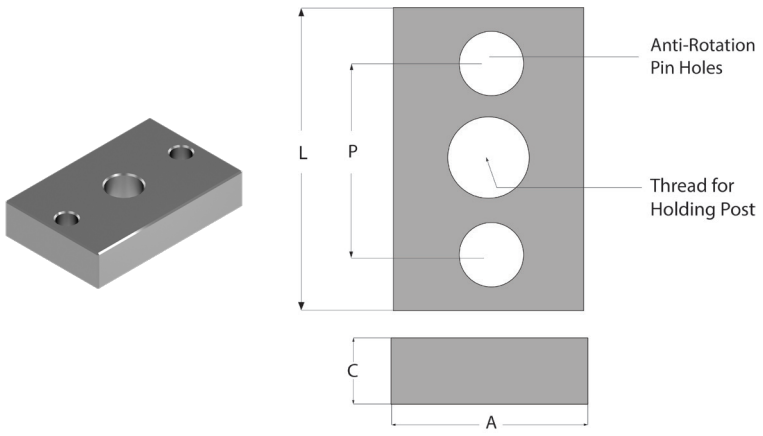

Machined T-Nut

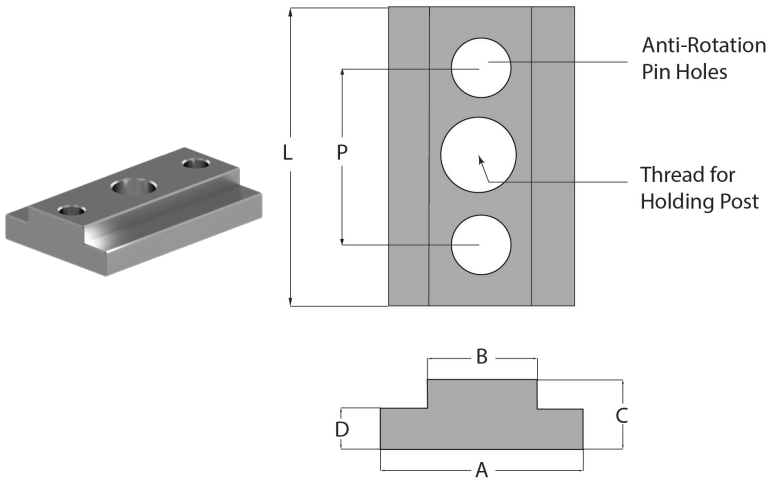

SDN Tool Post							
Blank T-Nut Description							
Reference Tool Post	**Blank T-Nut UPC No.**	**A**	**C**	**L**	**Thread Size**	**Anti-Rotation Pin Size**	**P**
SDN25AXA	73310106009	1.5”	1/2”	2.5”	1/2 - 20	10mm	50mm
SDN30BXA	73310106027	2”	5/8”	3”	5/8 - 18	10mm	60mm
SDN35CXA	73310106060	2.25”	3/4”	3.5”	3/4 - 16	10mm	70mm
SDN40CA	73310106073	2.5”	3/4”	4”	7/8 - 14	12mm	80mm
SDN50DA	73310106088	3.”	1.25”	5”	1 - 14	12mm	100mm
SDN60EA	73310106107	4”	1.5”	6”	1-1/8 - 12	12mm	120mm

The Blank T-Nut is supplied with the Tool Post at no extra charge.

SDN Tool Post									
Machined T-Nut Description									
Reference Tool Post	**Machined T-Nut UPC No.**	**A**	**B**	**C**	**D**	**L**	**Thread Size**	**Anti-Rotation Pin Size**	**P**
SDN25AXA	73310101187					2.5”	1/2 - 20	10mm	50mm
SDN30BXA	73310101337					3”	5/8 - 18	10mm	60mm
SDN35CXA	73310101487					3.5”	3/4 - 16	10mm	70mm
SDN40CA	73310101637					4”	7/8 - 14	12mm	80mm
SDN50DA	73310101787					5”	1 - 14	12mm	100mm
SDN60EA	73310101937					6”	1-1/8 - 12	12mm	120mm

Dimensions to be specified.

SDN Quick Change Tool Post & Toolholders Features

	Structure Specifications	Features	Application
SUPER Quick Change Tool Post			
	6 Tool Post sizes are available: SDN25AXA - 2.5” (63mm) Square SDN30BXA - 3.0” (76mm) Square SDN35CXA - 3.5” (89mm) Square SDN40CA - 4.0” (102mm) Square SDN50DA - 5.0” (127mm) Square SDN60EA - 6.0” (152mm) Square Toolholder Capacity: 3/8” (10mm) to 1.5” (40mm)	Designed with the most Advanced Technology Manufactured with the Highest Quality The Best Turning Performance of any Tool Post	For all the Multi Turning Applications From Prototype to High Production From High Precision to Heavy Roughing
No. D_-1 Turning & Facing Holder Page 47			
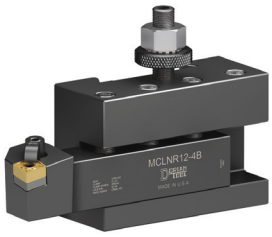	Holder are Built with 4140 Chromium-Molybdenum Alloy Steel Special Heat Treat Process to protect Surfaces & minimize Cutting Vibrations Quick Change Mounting	Toolholder Repeatability within .0001”/.00254mm Toolholder Squareness and Parallelism .0005”/inch (.012mm/25mm) Oversized capacity for larger square shank toolholders	For Multi Turning and Facing Operations
No. D2 Turning, Facing & Boring Holder Page 47			
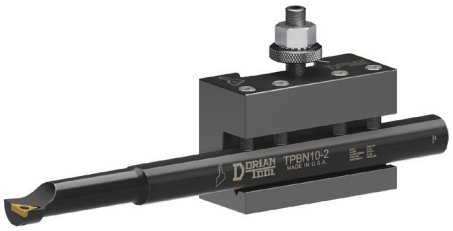	Holders are Built with 4140 Chromium-Molybdenum Alloy Steel Special Heat Treat Process to protect Surfaces & minimize Cutting Vibrations Quick Change Mounting Toolholder Flat has a “V” Groove to hold a Round Boring Bar	Toolholder Repeatability within .0001”/.00254mm Toolholder Squareness and Parallelism .0005”/inch (.012mm/25mm) Oversized capacity for larger square shank toolholders Designed to hold Square Shank Toolholders & Small Boring Bars	Wide Range of Turning, Facing & Boring Operations
No. D4-D41-D41S DUAL Extra Heavy Duty Boring Bar Holder Page 48 - 49			
	Holders are Built with 4140 Chromium-Molybdenum Alloy Steel Special Heat Treat Process to protect Surfaces & minimize Cutting Vibrations Quick Change Mounting Built with DOUBLE Boring Bar Locking System 360° Collar Locking System Self Centering Screw Lock System For Boring Bar with & without Flats	Toolholder Repeatability within .0001”/.00254mm Toolholder Squareness and Parallelism .0005”/inch (.012mm/25mm)	

NEW 360 ° Double Locking System

For Quick & Precise Set-Up with the Maximum Rigidity

The new DUAL Boring Bar Holder, has been engineered to maximize the holding force of the Boring Bar, achieving the most possible Boring rigidity for Heavy Duty Roughing, and Stability for High Surface Finishing and Close Boring Tolerances.

Features:

Dual Locking System	Longer Cutting Tool Life	Higher Productivity
Set Screws Locking System	Maximum Locking Force	Best Roughing Performance
360° Collar Locking System	Maximum Rigidity & Stability	Best Surface Finish & Tolerance

Mounting of a Boring Bar with Flats

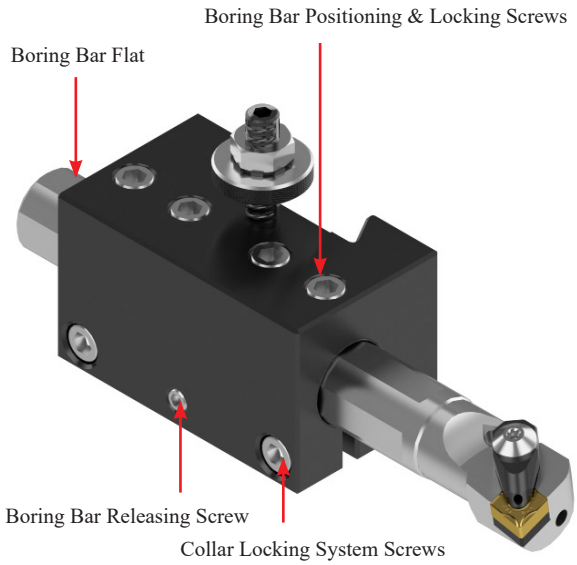

Mounting of a Boring Bar without Flats

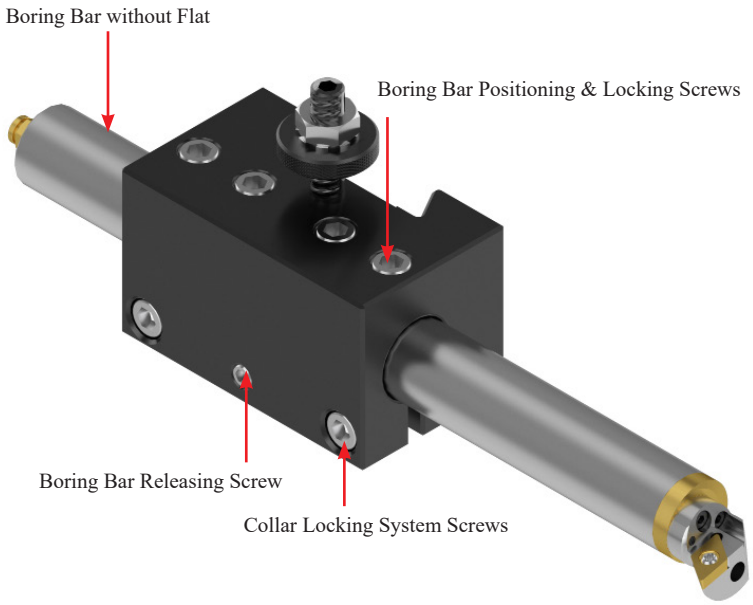

Locking Instruction

For Boring Bars with flats, Lock the Position Screws gently to set the Boring Bar on Center Line

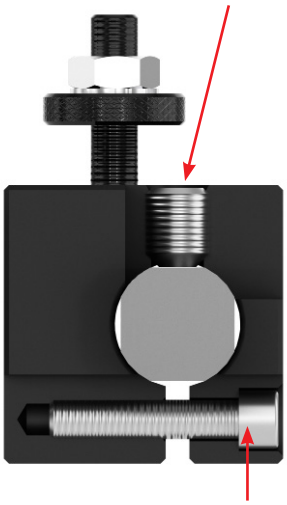

Once the Boring Bar is on center line, lock the holder side screws.
Once the Boring Bar is locked 360° around the Diameter in the Holder, tighten down the position screws.
The **DUAL** locking System will fuse the Boring Bar with the Holder in One Unit, achieving the best possible Boring Rigidity & Stability.

For Boring Bars without flats, Turn the Position Screws up, do not touch the Boring Bar Surface.

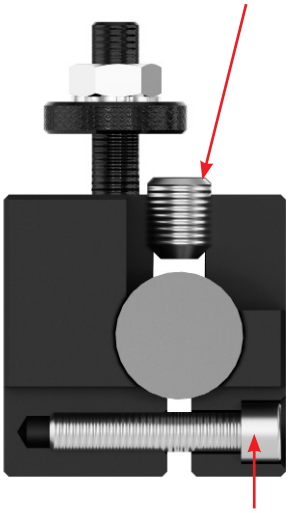

Set-Up the Boring Bar on center line, lock the holder side screws. The Boring Bar is locked 360° around the Diameter in the Holder, fusing the Boring Bar and the Holder into one piece achieving the best possible Boring Rigidity & Stability.

SDN Quick Change Tool Post & Toolholders Features

	Structure Specifications	Features	Application
No. D5 Morse Taper Holder Page 49 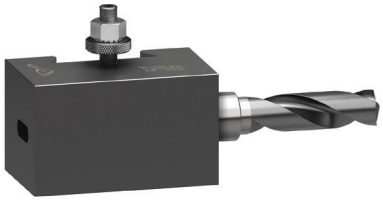	Holders are Built with 4140 Chromium-Molybdenum Alloy Steel Special Heat Treat Process to protect Surfaces & minimize Cutting Vibrations Quick Change Mounting	Toolholder Repeatability within .0001”/.00254mm Toolholder Squareness and Parallelism .0005”/inch (.012mm/25mm)	For drilling, reaming or tapping operations using a drill chuck or morse tapered tools. Heavy Duty Drilling Operations
No. D7-71C Reversible Twin Cut-Off Blade Holder Page 40 	Holder are Built with 4140 Chromium-Molybdenum Alloy Steel Special Heat Treat Process to protect Surfaces, & minimize Cutting Vibrations Quick Change Mounting	Toolholder Repeatability within .0001”/.00254mm Toolholder Squareness and Parallelism .0005”/inch (.012mm/25mm) Holds Industry Standard Sizes Cut-Off Blades	Cut-Off Operations Grooving Operations
No. D881 O.D. or I.D. Threading Holder Page 56 - 57 	Holder are Built with 4140 Chromium-Molybdenum Alloy Steel Special Heat Treat Process to protect Surfaces & minimize Cutting Vibrations Quick Change Mounting	Toolholder Repeatability within .0001”/.00254mm Toolholder Squareness and Parallelism .0005”/inch (.012mm/25mm) Holds OD Threading Cartridge Holds ID Threading Bar Easy to Set-Up, Simple to Use Uses Industry Style Threading Inserts	O.D .and I.D. Threading
No. D35 Dovetail Drill Chuck Holder Page 58 	Holder are Built with 4140 Chromium-Molybdenum Alloy Steel Special Heat Treat Process to protect Surfaces & minimize Cutting Vibrations 2 Pieces Construction, for Precise Parallelism Calibration Supplied with Rohm Drill Chuck Quick Change Mounting	Toolholder Repeatability within .0001”/.00254mm Toolholder Squareness and Parallelism .0005”/inch (.012mm/25mm) 1/2” (12mm)Tool Capacity. Precise, Strong &Rigid Drill Chuck	Versatile for Multi Operations Drilling, Boring, Reaming, Threading Using Standard Tools or Special Tools
No. D36 5C Collet Holder 	Special Heat Treat Process to protect Surfaces & minimize Cutting Vibrations	Toolholder Repeatability within .0001”/.00254mm Toolholder Squareness and Parallelism .0005”/inch (.012mm/25mm) Holds 5 C Collets Accept, Round, Square & Hexagonal Collets	Versatile for Multi Operations Drilling, Boring, Reaming, Threading Tapping Using Standard Tools or Special Tools

Super Quick Change Tool Post

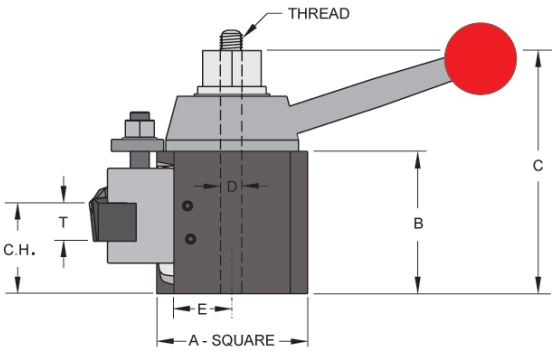

- Zero Backlash
- Triple Action Locking System
- Precise Repeatability within .0001
- 15º Locking Handle Position Adjustment
- Industry-Standard Interchangeable Holders

Part Number	**SDN25AXA**		**SDN30BXA**		**SDN35CXA**		**SDN40CA**		**SDN50DA**		**SDN60EA**	
UPC No. 733101-	**01000**		**01002**		**01004**		**01006**		**01008**		**01010**	
System	in	mm	in	mm	in	mm	in	mm	in	mm	in	mm
Lathe Swing Over Bed	≤12	≤300	13-15	330-380	14-17	350-430	16-20	400-500	17-32	430-810	≥25	≥635
A	2.500	63	3.000	76	3.500	88	4.000	101	5.000	126	6.000	152
B	2.500	63.5	2.750	69.9	3.250	82.60	3.750	95.25	4.625	117.48	5.000	127.0
C	4.240	107.7	4.710	119.6	5.650	143.51	6.335	160.91	7.435	188.85	8.060	204.72
D	0.500	12.7	0.625	16.0	0.750	19.0	0.875	22.23	1.000	25.40	1.125	28.6
E	0.880	22.35	1.115	28.32	1.199	30.45	1.530	38.86	1.900	48.26	2.207	56.06
T-Tool Capacity	3/8-3/4	10-20	1/2-1.0	12-25	3/4-1.0	20-25	1.0-1¼	25-32	1¼ - 1½	32-40	1 ½	40.0
Optimum C.H.*	1.250	31.75	1.312	33.32	1.625	41.28	1.937	49.20	2.562	65.07	3.000	76.20
C.H. MIN.	0.875	22,2	1.062	27,0	1.250	31,8	1.562	39.7	2.000	50.80	2.500	63.5
C.H. MAX.	1.875	47.63	1.937	49,20	2.250	57.75	2.562	65.07	3.575	85.73	3.500	88.90
Thread	1/2-20		5/8-18	M16x2,0	3/4-16	M18x2,5	7/8-14	M20x1,5	1.0-14	M24x3,0	1⅛-12	M27x3,0

* Optimum center height is calculated with the smaller tool System of the tool capacity. If the higher System tool is to be used, add 1/8″ to the optimum center height.

No. D1 Turning & Facing Toolholder

This toolholder is best used for holding square shank toolholders close to the tool post to maximize rigidity when turning, facing, and threading.
Fits industry standard tool posts.

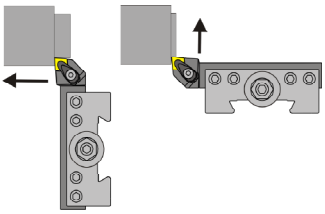

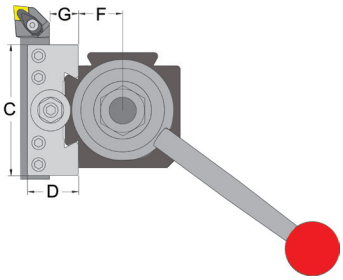

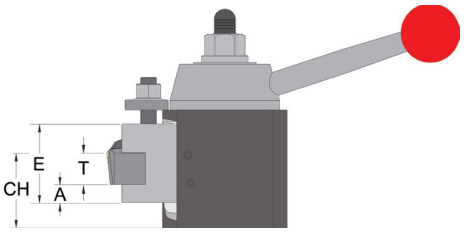

Part Number	UPC No.733101-	A	T	C	D	E	F	G	CH	
									Min.CH	Max. CH
D25AXA-1	**01100**	0.375	0.750	2.750	1.210	1.710	0.875	0.760	0.750	1.915
D30BXA-1	**01250**	0.437	1.000	3.250	1.460	2.210	1.115	0.860	0.937	1.977
D35CXA-1	**01400**	0.500	1.000	3.750	1.710	2.460	1.199	0.980	1.250	2.290
D40CA-1	**01550**	0.562	1.250	4.500	1.960	2.960	1.530	1.010	1.562	2.602
D50DA-1	**01700**	0.750	1.500	6.000	2.460	3.460	1.900	1.290	2.000	3.415
D60EA-1	**01850**	1.000	1.500	7.000	2.960	3.960	2.213	1.540	2.500	3.540

No. D2 Turning, Facing & Boring Toolholder

The "V" groove makes this holder more versatile so that it can hold either square shank toolholders or boring bars. Holds the tool close to the tool post to maximize rigidity when turning, facing, threading or boring. Fits industry standard toolposts.

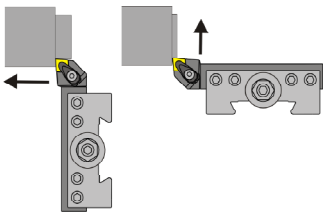

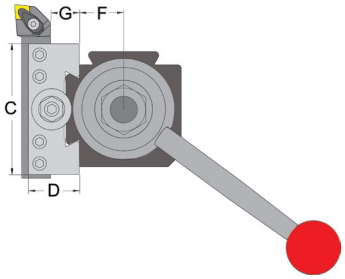

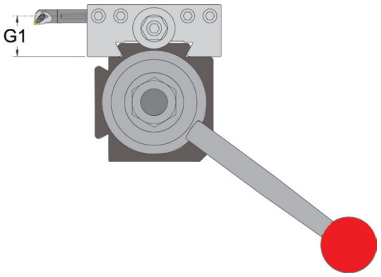

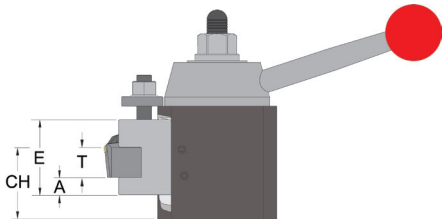

Part Number	UPC No.733101-	A	T	C	D	E	F	G	G1	CH	
										Min.CH	Max. CH
D25AXA-2	**01104**	0.375	0.750	2.750	1.210	1.710	0.875	0.760	1.000	0.750	1.915
D30BXA-2	**01254**	0.437	1.000	3.250	1.460	2.210	1.115	0.860	1.180	0.937	1.977
D35CXA-2	**01404**	0.500	1.000	3.750	1.710	2.460	1.199	0.980	1.380	1.250	2.290
D40CA-2	**01554**	0.562	1.250	4.500	1.960	2.960	1.530	1.010	1.545	1.562	2.602
D50DA-2	**01704**	0.750	1.500	6.000	2.460	3.460	1.900	1.290	1.950	2.000	3.415
D60EA-2	**01854**	1.000	1.500	7.000	2.960	3.960	2.213	1.540	2.270	2.500	3.540

No. D4-CNC-DUAL Heavy Duty Boring Bar Toolholder

This Toolholder with DUAL Locking System is best used for holding Round Tools and Boring Bars with or without flats. The Boring Bar is locked 360° around the Diameter in the Toolholder. The DUAL locking System will fuse the Boring Bar with the Toolholder in One Unit, achieving the best possible Boring Operation for Rigidity, Stability & Performance.

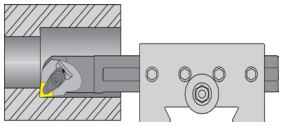

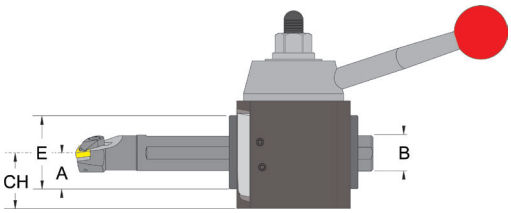

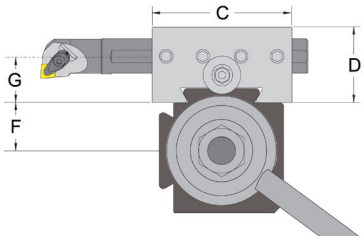

Part Number	UPC No.733101-	A	B Boring Bar Capacity	C	D	E	F	G	CH Min.CH	CH Max. CH
Inch Toolholders										
D25AXA-4-750-DUAL	**01111**	0.740	0.750	2.750	1.480	1.480	0.875	0.937	0.740	1.760
D30BXA-4-1000-DUAL	**01261**	0.980	1.000	3.250	1.960	1.960	1.115	1.250	0.980	1.770
D35CXA-4-1000-DUAL	**01411**	1.105	1.000	3.750	2.210	2.210	1.199	1.375	1.105	2.145
D40CA-4-1250-DUAL	**01559**	1.230	1.250	4.500	2.460	2.460	1.530	1.500	1.230	2.520
D50DA-4-1500-DUAL	**01709**	1.480	1.500	5.500	2.960	2.960	1.900	1.875	1.480	3.145
D60EA-4-2000-DUAL	**01859**	1.980	2.000	6.500	3.960	3.960	2.213	2.375	1.980	3.020
Metric Toolholders										
D25AXA-4M-20-DUAL	**01117**	18.80	20.00	69.85	37.59	37.59	22.23	23.80	18.80	44.70
D30BXA-4M-25-DUAL	**01267**	24.89	25.00	82.55	49.78	49.78	28.32	31.75	24.89	44.96
D35CXA-4M-25-DUAL	**01417**	28.07	25.00	95.25	56.13	56.13	30.45	34.93	28.07	54.48
D40CA-4M-32-DUAL	**01567**	31.24	32.00	114.30	62.48	62.48	38.86	38.10	31.24	64.01
D50DA-4M-40-DUAL	**01717**	37.59	40.00	139.70	75.18	75.18	48.26	47.63	37.59	79.88
D60EA-4M-50-DUAL	**01867**	50.29	50.00	165.10	100.58	100.58	56.21	63.50	50.29	76.71

No. D41-DUAL Universal Extra Heavy Duty Boring Bar Toolholder

This Toolholder with DUAL Locking System is best used for holding Round Tools and Boring Bars with or without flats. The Boring Bar is locked 360° around the Diameter in the Toolholder. The DUAL locking System will fuse the Boring Bar with the Toolholder in One Unit, achieving the best possible Boring Operation for Rigidity, Stability & Performance.

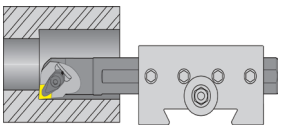

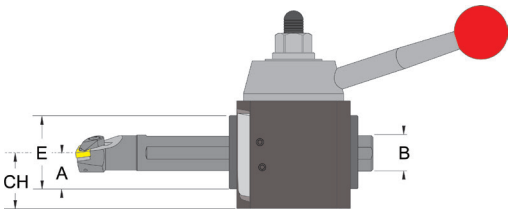

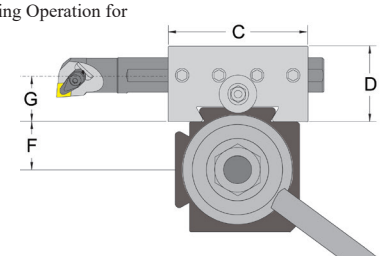

Part Number	UPC No.733101-	A	B Boring Bar Capacity	C	D	E	F	G	CH Min.CH	CH Max. CH
Inch Toolholders										
D25AXA-41-1000-DUAL	**01113**	0.855	1.000	2.750	1.710	1.710	0.875	1.062	0.855	1.645
D30BXA-41-1250-DUAL	**01263**	1.105	1.250	3.250	2.210	2.210	1.115	1.375	1.105	1.645
D35CXA-41-1250-DUAL	**01413**	1.105	1.250	3.750	2.210	2.210	1.199	1.375	1.105	2.145
D40CA-41-1500-DUAL	**01563**	1.230	1.500	4.500	2.460	2.460	1.530	1.500	1.230	2.520
D50DA-41-2000-DUAL	**01713**	1.730	2.000	5.500	3.460	3.460	1.900	2.060	1.730	2.895
D60EA-41-2500-DUAL	**01863**	2.230	2.500	6.500	4.460	4.460	2.213	2.750	2.230	2.770
Metric Toolholders										
D25AXA-41M-25-DUAL	**01119**	21.72	25.00	69.85	43.43	43.43	22.23	26.97	21.72	41.78
D30BXA-41M-32-DUAL	**01269**	28.07	32.00	82.55	56.13	56.13	28.32	34.93	28.07	41.78
D35CXA-41M-32-DUAL	**01419**	28.07	32.00	95.25	56.13	56.13	30.45	34.93	28.07	54.48
D40CA-41M-40-DUAL	**01569**	34.42	40.00	114.30	68.83	68.83	38.86	41.28	34.42	60.83
D50DA-41M-50-DUAL	**01719**	43.94	50.00	139.70	87.88	87.88	48.26	52.32	43.94	73.53
D60EA-41M-60-DUAL	**01869**	56.64	60.00	165.10	113.28	113.28	56.21	69.85	56.64	70.36

No. D41S-DUAL Super Universal Over Sized Boring Bar Toolholder

This Toolholder with DUAL Locking System is best used for holding Round Tools and Boring Bars with or without flats. The Boring Bar is locked 360° around the Diameter in the Toolholder. The DUAL locking System will fuse the Boring Bar with the Toolholder in One Unit, achieving the best possible Boring Operation for Rigidity, Stability & Performance.

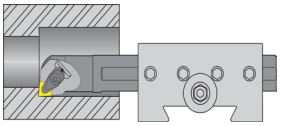

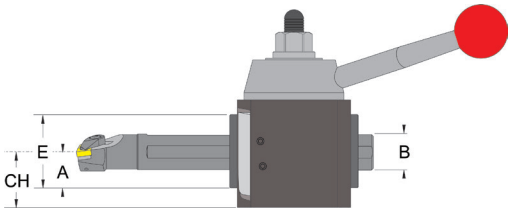

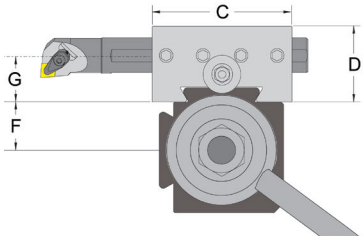

Part Number	UPC No.733101-	A	B Boring Bar Capacity	C	D	E	F	G	CH	
									Min.CH	Max. CH
Inch Toolholders										
D35CXA-41S-1500-DUAL	**00415**	1.230	1.500	4.000	2.460	2.460	1.199	1.500	1.230	2.020
D40CA-41S-2000-DUAL	**00565**	1.480	2.000	4.500	2.960	2.960	1.530	1.675	1.480	2.270
D50DA-41S-2500-DUAL	**00715**	1.980	2.500	6.500	3.960	3.960	1.900	2.250	1.980	2.645
D60EA-41S-3000-DUAL	**00865**	2.230	3.000	7.000	4.460	4.460	2.213	2.625	2.230	2.770
Metric Toolholders										
DQ35CXA-41SM-40-DUAL	**00423**	32.39	40.00	101.60	62.48	62.48	30.45	38.10	32.39	52.45
DQ40CA-41SM-50-DUAL	**00571**	37.59	50.00	114.30	75.18	75.18	38.86	42.55	37.59	57.66
DQ50DA-41SM-60-DUAL	**00721**	50.29	60.00	165.10	100.58	100.58	48.26	57.15	50.29	67.18
DQ60EA-41SM-80-DUAL	**00871**	58.55	80.00	177.80	113.28	113.28	56.21	66.68	58.55	72.26

No. D5 Morse Taper Toolholder

This holder is best used for holding morse taper tools. It can be used for drilling, boring, or reaming operations. Fits industry standard tool posts.

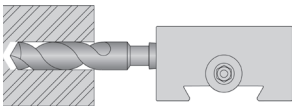

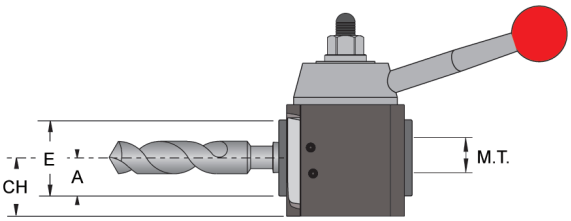

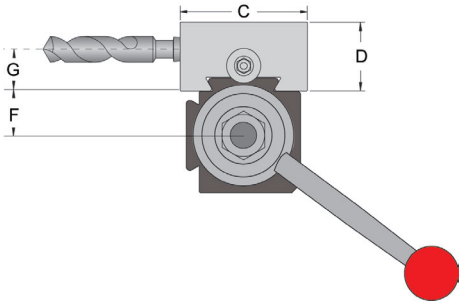

Part Number	UPC No. 733101-	System	A	Morse Taper	C	D	E	F	G	CH	
										Min. CH	Max. CH
D35CXA-5-4	**01424**	in	1.230	MT4	4.250	2.460	2.460	1.199	1.615	1.230	2.020
		mm	31.24	MT4	107.95	62.48	62.48	30.45	41.02	31.24	51.31
D40CA-5-4	**01572**	in	1.230	MT4	4.500	2.460	2.460	1.530	1.615	1.230	2.520
		mm	31.24	MT4	114.30	62.48	62.48	38.86	41.02	31.24	64.01
D50DA-5-5	**01722**	in	1.730	MT5	5.625	3.460	3.460	1.900	2.300	1.730	2.895
		mm	43.94	MT5	142.88	87.88	87.88	48.26	58.42	43.94	73.53
D60EA-5-5	**01872**	in	1.730	MT5	5.625	3.460	3.460	2.213	2.300	1.730	3.270
		mm	43.94	MT5	142.88	87.88	87.88	56.21	58.42	43.94	83.06

No. D7-71C Extra Heavy Duty Cut-Off Blade Toolholder

This holder is best used for holding cut-off blades. It has a taper locking system for maximum rigidity and performance in cut-off and face groov-
ing
operations. Fits industry standard tool posts. For Slot Grip Cut-Off Blades and Inserts see next page.

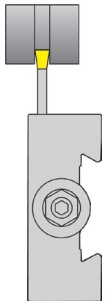

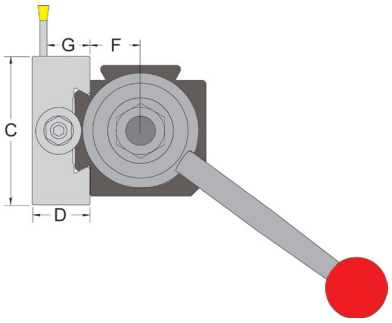

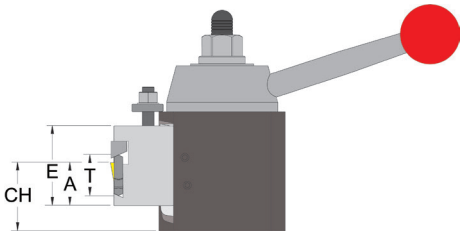

Part Number	UPC No.733101-	System	A	Slot Grip Blade T		C	D	E	F	G	CH	
											Min.CH	Max. CH
D25AXA-7-71C	01126	in	0.933	SGIH-19-2	TWECOB-19-2	2.750	1.210	1.960	0.875	1.097	0.933	1.473
		mm	23.70			69.85	30.73	49.78	22.23	27.86	23.70	37.41
D30BXA-7-71C	01276	in	0.933			3.250	1.210	1.960	1.115	1.097	0.933	1.723
		mm	23.70			82.55	30.73	49.78	28.32	27.86	23.70	43.76
D35CXA-7-71C	01428	in	1.250	SGIH-26-2 to 26-6	TWECOB-26-2 to 26-6	3.750	1.710	2.460	1.199	1.490	1.250	2.040
		mm	31.75			95.25	43.43	62.48	30.45	37.85	31.75	51.82
D40CA-7-71C	01576	in	1.500			4.500	1.710	2.960	1.530	1.490	1.500	2.290
		mm	38.10			114.30	43.43	75.18	38.86	37.85	38.10	58.17
D50DA-7-71C	01726	in	1.460	SGIH-32-3 to 32-9	TWECOB-32-2 to 32-6	6.000	1.960	2.960	1.900	1.680	1.460	3.125
		mm	37.08			152.40	49.78	75.18	48.26	42.67	37.08	79.38
D60EA-7-71C	01876	in	2.025			7.000	2.210	3.460	2.213	1.930	2.025	3.565
		mm	51.44			177.80	56.13	87.88	56.21	49.02	51.44	90.55

SLOT GRIP

Positive Stop Blades

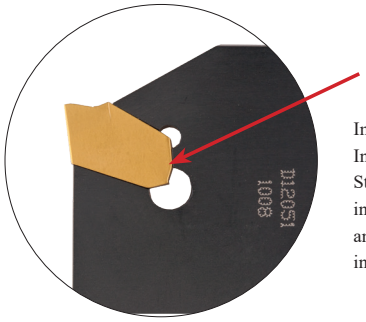

Positive Stop

Improved design featuring a "Positive Stop". Inserts are securely held in Slot Grip Positive Stop Blades by a tapered locking system featuring a "Positive Stop" that prevents insert drift and the blade pocket from spreading once the insert is firmly in place.

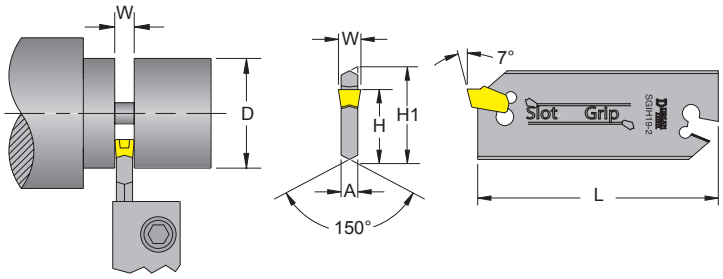

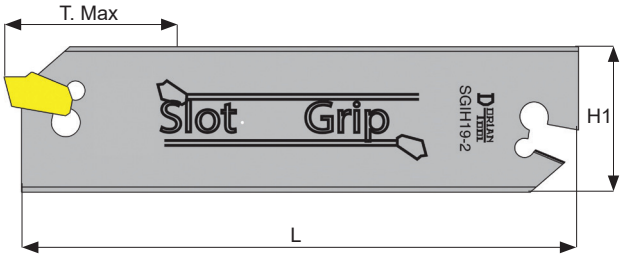

Designed for use with standard SGTN cut-off inserts and standard cut-off blade holders. The insert's cutting edge location repeats accurately and as a result prevents insert splitting under heavy feed and shock loads. The blade and insert geometry allows free chip flow, minimizing insert breakage due to chip build-up.

19mm (3/4") Slot Grip Blades

Blades Part Number	UPC #	T. Max	A	D	L	H	H1	Insert Part Number	Insert Width
SGIH19-2	62950	0.785	0.063	1.570	3.380	0.618	0.750	SGT(N/R/L)-2	.079"

26mm (1") Slot Grip Blades

SGIH26-2	62951	1.000	0.063	2.000	4.330	0.842	1.020	SGT(N/R/L)-2	.079"
SGIH26-3	62952	1.500	0.094	3.000				SGT(N/R/L)-3	.118"
SGIH26-4	62953	1.575	0.125	3.150				SGT(N/R/L)-4	.157"

32mm (1 1/4") Slot Grip Blades

SGIH32-3	62956	1.970	0.094	3.940	5.900	0.984	1.250	SGT(N/R/L)-3	.118"
SGIH32-4	62957	1.970	0.125	3.940				SGT(N/RL)-4	.157"
SGIH32-5	62958	2.355	0.156	4.710				SGT(N/R/L)-5	.197"
SGIH32-6	62959	2.355	0.203	4.710				SGT(N/R/L)-6	.236"
SGIH32-8	62960	2.755	0.268	5.510				SGT(N/R/L)-8	.315"
SGIH32-9	62961	2.755	0.312	5.510				SGT(N/R/L)-9	.354"

SLOT GRIP

SG_ Inserts for Cut-Off & Grooving Operations

SGTN Neutral	SGTR Right Hand	SGTL Left Hand
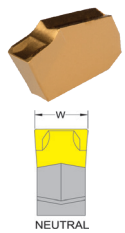	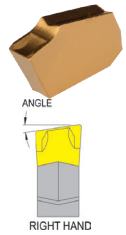	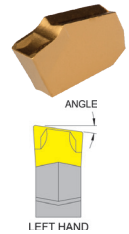

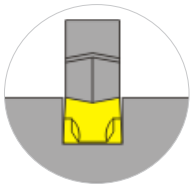

Chip breaker Geometry

- Reduced machining force
- Controlled, coiled chip flow
- Higher material removal rate

Application

- Quickly inserted into adjustable blades
- For cut-off and grooving
- Fair for interrupted cuts

Cut-Off & Grooving

Inserts are designed for use with standard cut-off inserts and standard cut-off blade holders. The insert's cutting edge location repeats accurately and as a result prevents insert splitting under heavy feed and shock loads. The blade and insert geometry permits free chip flow, minimizing insert breakage due to chip build-up.

Material	Carbon & Alloy Steel	Aluminum & Non-Ferrous Metals & Materials	Carbon & Alloy Steel	300 & 400 Series Stainless Steel	Cast Iron, Copper/Brass	Aluminum & Non-Ferrous Materi-als	High Temp Alloys	Hard Steel to 58 HRC
Insert Grade	P35	K25 N25	K25 P25 M25					
Insert Coating	CVD TiN Coated	Uncoated	PVD TiAlN Coated					

Insert Grade	Dimensions				DC656	DK25	DASK25B
ANSI	Insert Size mm	Lead Angle	Width + 0,05 inch	Width + 0,05 mm	UPC #	UPC #	UPC #
SGTN-2	2	0º	.087	2	82222	82220	82223
SGTN-2.4	2,4	0	.094	2,4	82306	82304	82307
SGTN-3	3	0º	.122	3	82226	82224	82227
SGTN-4	4	0º	.161	4	82230	82228	82231
SGTN-4.8	4,8	0	.189	4,8	82318	82316	82319
SGTN-5	5	0º	.201	5	82234	82232	82235
SGTN-6	6	0º	.252	6	82238	82236	82239
SGTN-8	8	0º	.315	8	82242	-	-
SGTN-9	9	0º	.378	9	82246	82244	82247
SGTR-2-8	2	8º	.087	2	82250	82248	82251
SGTR-2.4-8	2,4	8	.094	2,4	82310	82308	82311
SGTR-3-8	3	8º	.122	3	82254	82252	82255
SGTR-4-8	4	8º	.161	4	82258	82256	82259
SGTR-4.8-8	4,8	8	.189	4,8	82322	82320	82323
SGTR-5-8	5	8º	.201	5	82262	82260	82263
SGTR-6-8	6	8º	.252	6	82266	-	-
SGTR-9-8	9	8º	.378	9	82274	-	-
SGTL-2-8	2	8º	.087	2	82278	82276	82279
SGTL-4-8	4	8º	.161	4	-	82284	82287
SGTL-5-8	5	8º	.201	5	82290	-	-

Twin Edge Blades

- Double Cutting Edge
- High Rigidity
- Better Finish
- Straight Cut

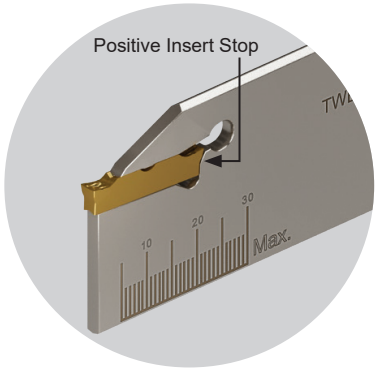

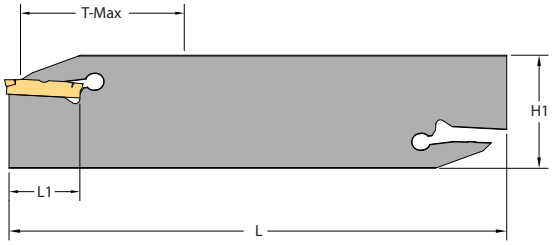

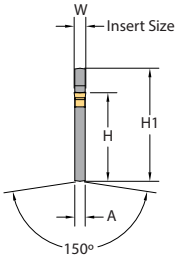

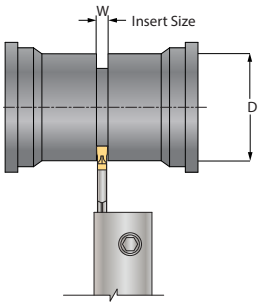

Insert Extraction Key Sold Separately

19mm (3/4") Twin Edge Blades

Blades Part Number	UPC #	T. Max	A	D	L	L1	H	H1	Insert Part Number	Insert Width	Insert Extraction Key Part Number	UPC #
TWECOB-DNTF-19-20	61973	.785	0.063	1.570	3.380	0.866	0.618	0.750	DNTQ-22 2002-3EU-N	0.079	KCIK-DN	61204
									DNPG-22 2002-1SR-N			

26mm (1") Twin Edge Blades

Blades Part Number	UPC #	T. Max	A	D	L	L1	H	H1	Insert Part Number	Insert Width	Insert Extraction Key Part Number	UPC #
TWECOB-DNTF-26-20	61965	1.000	0.063	2.000	4.331	0.866	0.842	1.024	DNTQ-22 2002-3EU-N	0.079	KCIK-DN	61204
									DNPG-22 2002-1SR-N			
TWECOB-DNTF-26-30	61966	1.550	0.094	3.100	4.331	0.866	0.842	1.024	DNTQ-22 3003-3EU-N	0.118		
									DNTR-22 3015-3EU-N			
									DNPG-22 3002-1SR-N			
TWECOB-DNTF-26-40	61967	1.650	0.125	3.300	4.331	0.866	0.842	1.024	DNTQ-25 4004-3EU-N	0.157		
									DNTR-25 4020-3EU-N			
									DNPG-25 4003-1SR-N			

32mm (1 1/4") Twin Edge Blades

Blades Part Number	UPC #	T. Max	A	D	L	L1	H	H1	Insert Part Number	Insert Width	Insert Extraction Key Part Number	UPC #
TWECOB-DNTF-32-20	61968	1.150	0.063	2.300	5.906	0.866	0.984	1.260	DNTQ-22 2002-3EU-N	0.079	KCIK-DN	61204
									DNPG-22 2002-1SR-N			
TWECOB-DNTF-32-30	61969	1.750	0.094	3.500	5.906	0.866	0.984	1.260	DNTQ-22 3003-3EU-N	0.118		
									DNTR-22 3015-3EU-N			
									DNPG-22 3002-1SR-N			
TWECOB-DNTF-32-40	61970	1.950	0.125	3.900	5.906	0.984	0.984	1.260	DNTQ-25 4004-3EU-N	0.157		
									DNTR-25 4020-3EU-N			
									DNPG-25 4003-1SR-N			
TWECOB-DNTF-32-50	61971	2.350	0.157	4.700	5.906	0.984	0.984	1.260	DNTQ-25 5004-3EU-N	0.197		
									DNTR-25 5025-3EU-N			
									DNPG-25 5004-1SR-N			
TWECOB-DNTF-32-60	61972	2.750	0.203	5.500	5.906	0.984	0.984	1.260	DNTQ-25 6004-3EU-N	0.236		
									DNPG-25 6004-1SR-N			

Insert Specification

Double-End
Cutting Edge
DNTQ-N- DUP35UG

Neutral Straight Nose
Multi-Cutting Direction
Right Hand and Left Hand

Cutting Data

Insert Dimension			Maximum a_p Depth of Cut for Turning	Maximum f_n Feed Rate for Turning, Grooving
Width	**Length**	**Corner Radius**	**inch**	**in/rev.**
.079" (2mm)	.866"	.008"	.039"	.006 in/rev
.118" (3mm)	.866"	.012"	.059"	.008 in/rev
.157" (4mm)	.984"	.016"	.079"	. 009 in/rev
.197" (5mm)	.984"	.016"	.098"	.010 in/rev
.236" (6mm)	.984"	.016"	.118"	.012 in/rev

Insert Application

Turning

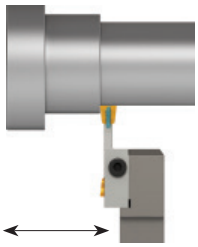

Grooving

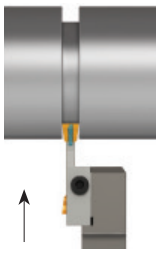

Parting-Off

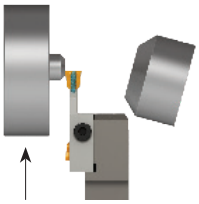

Insert Geometry, Material Application

Steel	Stainless Steel	Cast Iron	Non Ferrous	Super Alloys
●	●	●	○	○

● First Choice Grade ○ Second Best

Double-End
Cutting Edge
DNTR-N- DUP35UG

Neutral Round Nose
Multi-Cutting Direction
Right Hand and Left Hand

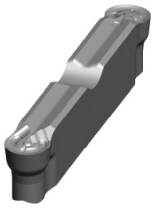

Cutting Data

Insert Dimension			Maximum a_p Depth of Cut for Turning	Maximum f_n Feed Rate for Turning, Groov-
Width	**Length**	**Radius**	**inch**	**in/rev.**
.118" (3mm)	.866"	.059" (1.5mm)	.059"	.012 in/rev
.157" (4mm)	.984"	.079" (2.0mm)	.079"	.014 in/rev
.197" (5mm)	.984"	.098" (2.5mm)	.098"	.016 in/rev

Profiling

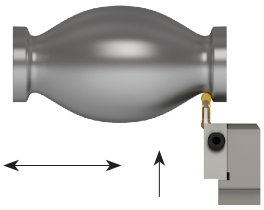

Turning

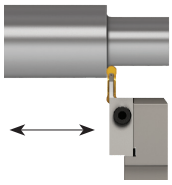

Grooving

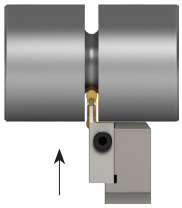

Insert Geometry, Material Application

Steel	Stainless Steel	Cast Iron	Non Ferrous	Super Alloys
●	●	●	○	○

● First Choice Grade ○ Second Best

Double-End
Cutting Edge
DNPG-N- DPP40SG

Neutral Straight Nose
Uni-Direction Parting Off & Grooving

Cutting Data

Insert Dimension			Maximum f_n Feed Rate for Parting-off
Width	**Length**	**Corner Radius**	**in/rev.**
.079" (2mm)	.866"	.008"	.006 in/rev
.118" (3mm)	.866"	.008"	.008 in/rev
.157" (4mm)	.984"	.012"	.009 in/rev
.197" (5mm)	.984"	.016"	.010 in/rev
.236" (6mm)	.984"	.016"	.012 in/rev

Grooving

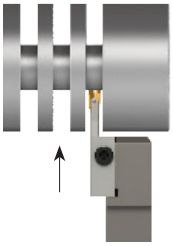

Parting-Off

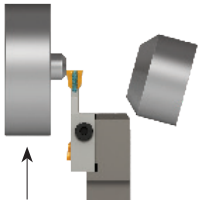

Insert Geometry, Material Application

Steel	Stainless Steel	Cast Iron	Non Ferrous	Super Alloys
●	●			

● First Choice Grade ○ Second Best

Kool-Cut™ Twin Edge Blade Ordering Specifications

DUP35UG					
Material		V_c (SFM)			
	Steel	F/min.		m/min.	
P	Carbon Steel	363	627	110	190
	Low Alloy Steel	363	594	110	180
	High Temp Alloys	231	528	70	160
M	Ferritic	396	660	120	200
	Austenitic	330	561	100	170
	Duplex	231	363	70	110
	Martensitic	198	297	60	90
K	Gray Cast Iron	330	660	100	200
	Modular Cast Iron	330	594	100	180
	Malleable Cast Iron	264	528	80	160
N	Unleaded Copper	373	825	113	250
	Brass	663	1472	201	446
	Unleaded Bronze	287	495	87	150
S	Iron Base	86	172	26	52
	Nickel Base	53	116	16	35
	Titanium	198	429	60	130

DPP40SG					
Material		V_c (SFM)			
	Steel	F/min.		m/min.	
P	Carbon Steel	264	495	80	150
	Low Alloy Steel	231	396	70	120
	High Temp Alloys	198	330	60	100
M	Ferritic	330	594	100	180
	Austenitic	264	495	80	150
	Duplex	231	363	70	110
	Martensitic	198	297	60	90
K	Gray Cast Iron	264	561	80	170
	Modular Cast Iron	297	495	90	150
	Malleable Cast Iron	231	462	70	140
N	Unleaded Copper				
	Brass				
	Unleaded Bronze				
S	Iron Base				
	Nickel Base				
	Titanium				

DUP35UG	HC-P25/M25 K30 N30 S30	Coated	PVD-TiAlN 4µm
Insert Characteristics	**Hard, Wear, Abrasive and Impact Resistant**		
First Choice Application	Universal Multi Purpose Turning and Grooving Application; for carbon steel, alloy steel, stainless steel, cast iron, high-temp alloys & non-ferrous materials		
Cutting Speed SFM (Vc)	High Cutting Speed in stable turning and grooving conditions, light interrupted cut		
Cutting Condition	**Wet**		

DPP40SG	HC-P45/M45	Multi Coated	PVD-TiAlN 7µm
Insert Characteristics	**Extremely Tough and Impact Resistant Substrate**		
First Choice Application	For Heavy or Interrupted Part Off and Grooving Applications; for Forgings and Castings of Carbon Steel, Alloy Steel, Stainless Steel and Cast Iron		
Cutting Speed SFM (Vc)	Low to Medium Cutting Speed in unstable conditions and heavy interrupted cut		
Cutting Condition	**Wet**		

Insert Specifications

"T" Square Nose

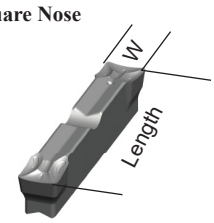

UPC #	Application	Part Number	Insert Size Width	Insert Size Length	Corner Radius	Grade DUP35UG
82440	Turning Grooving Parting-Off	DNTQ-22 2002-3EU-N DUP35UG	.079" (2mm)	.866"	.008"	•
82442		DNTQ-22 3003-3EU-N DUP35UG	.118" (3mm)	.866"	.012"	•
82443		DNTQ-25 4004-3EU-N DUP35UG	.157" (4mm)	.984"	.016"	•
82444		DNTQ-25 5004-3EU-N DUP35UG	.197" (5mm)	.984"	.016"	•
82445		DNTQ-25 6004-3EU-N DUP35UG	.236" (6mm)	.984"	.016"	•

"R" Round Nose

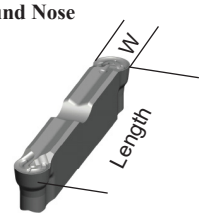

UPC #	Application	Part Number	Insert Size Width	Insert Size Length	Radius	Grade DUP35UG
82458	Profiling Turning Grooving	DNTR-22 2010-3EU-N-DUP35UG	.079" (2mm)	.866"	.039" (1mm)	•
82459		DNTR-22 3015-3EU-N DUP35UG	.118" (3mm)	.866"	.059" (1.5mm)	•
82460		DNTR-25 4020-3EU-N DUP35UG	.157" (4mm)	.984"	.079" (2.0mm)	•
82461		DNTR-25 5025-3EU-N DUP35UG	.197" (5mm)	.984"	.098" (2.5mm)	•

"G" Square Nose

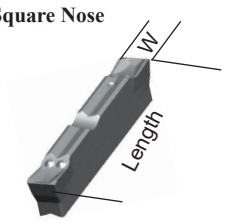

UPC #	Application	Part Number	Insert Size Width	Insert Size Length	Corner Radius	Grade DPP40SG
82475	Grooving Parting-Off	DNPG-22 2002-1SR-N DPP40SG	.079" (2mm)	.866"	.008"	•
82476		DNPG-22 3002-1SR-N DPP40SG	.118" (3mm)	.866"	.008"	•
82477		DNPG-25 4003-1SR-N DPP40SG	.157" (4mm)	.984"	.012"	•
82478		DNPG-25 5004-1SR-N DPP40SG	.197" (5mm)	.984"	.016"	•
82479		DNPG-25 6004-1SR-N DPP40SG	.236" (6mm)	.984"	.016"	•

No. D881 O.D. and I.D. Threading Toolholder

This holder is capable of covering all threading requirements. It uses standard carbide inserts. The holder is supplied with a cartridge for external threading. Fits industry standard tool posts.

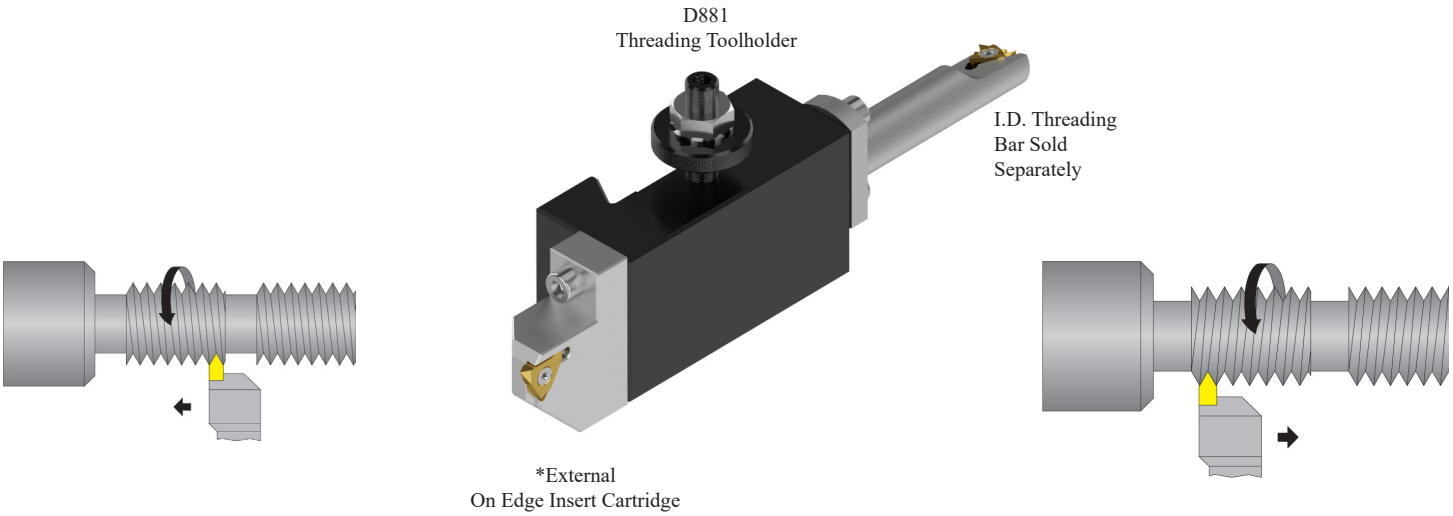

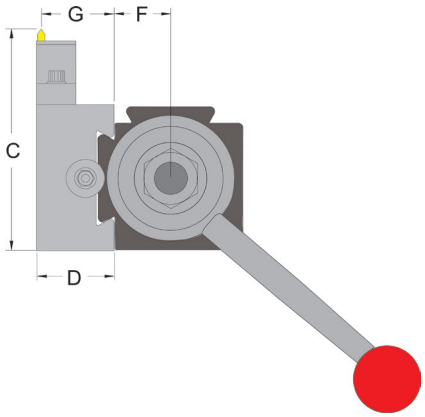

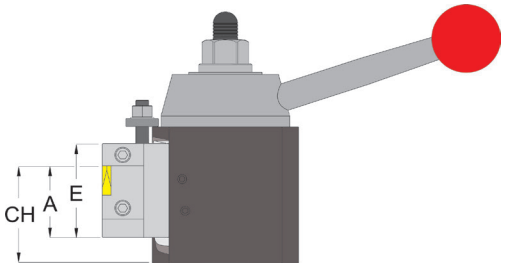

Part Number	UPC No.	System	A	C	D	E	F	G	CH		*External On Edge Insert Cartridge				
									Min.CH	Max. CH	Desc.	UPC No. 733101-	TNMC Insert	Torx Screw	Torx Key
D25AXA-881-OE	01132	in	0.875	4.140	1.210	1.710	0.875	1.263	0.875	1.665	TIH253-32	03621	32	GTS-1M	T-10
		mm	22.23	105.16	30.73	43.43	22.23	32.08	22.23	42.29					
D30BXA-881-OE	01282	in	0.875	4.640	1.210	1.710	1.115	1.263	0.875	1.915					
		mm	22.23	117.86	30.73	43.43	28.32	32.08	22.23	48.64					
D35CXA-881-OE	01434	in	1.250	5.400	1.460	1.960	1.199	1.398	1.250	2.540	TIH354-32	03623	32	GTS-1M	T-10
		mm	31.75	137.16	37.08	49.78	30.45	35.51	31.75	64.52					
D40CA-881-OE	01582	in	1.500	6.150	1.710	2.460	1.530	1.648	1.500	2.790					
		mm	38.10	156.21	43.43	62.48	38.86	41.86	38.10	70.87					

* Holder is supplied standard with External On Edge Insert Cartridge.
Internal threading bar sold separately. Inserts not included.

SDN-Lay-Down Threading Bar Ordering Specifications

Internal Threading Bar For D881 Toolholder

This cartridge is to be used on the #881 holder. It is used for internal threading with a laydown insert. It can be mounted on either end of the base holder.

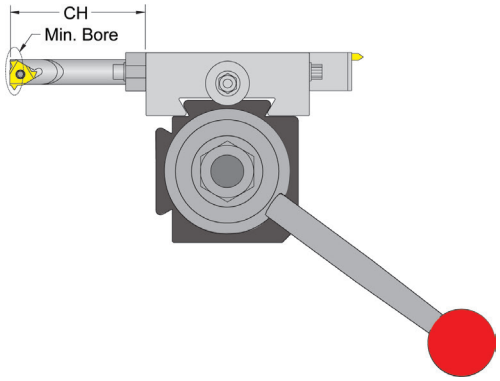

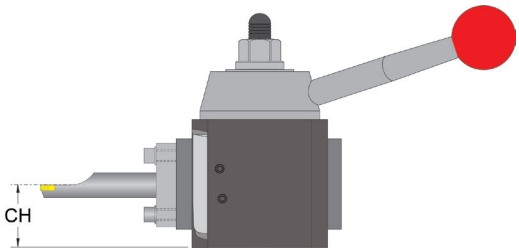

Right Hand

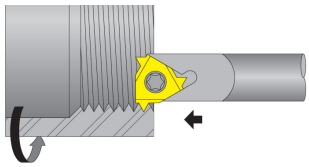

Left Hand

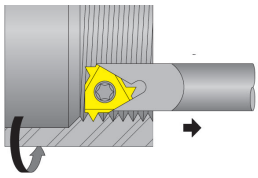

Series	Right Hand			Min. Bore		C		Pitch		Insert I.C.	Torx Screw	Torx Key
	Part No.	No. 733101-	Insert	in	mm	in	mm	TPI	mm			
25,30,35,40	NL50R	03661	11IR-A60	0.500	12,7	2.375	60,3	16-48	0,5-1,5	.250	TS-25.45-6M1	T-8
25,30,35,40	NL75R	03663	16IR-AG60	0.750	19,1	2.875	73,0	8-48	0,5-3,0	.375	TS-16	T-10

Laydown Threading Insert 60° Partial Profile

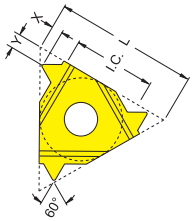

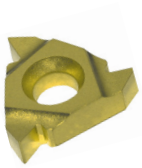

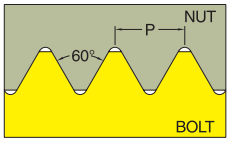

Lay-Down Internal Right Hand					Lay-Down Internal Left Hand					Insert Specification					
Part No.	Grade	UPC	Grade	UPC	Part No.	Grade	UPC	Grade	UPC	L	I.C.	TPI		x	y
11IR-A60	DVP656	74056	DVK10	74057	11IL-A60	DVP656	74060	DVK10	74061	11 mm	0.250	16-48	0,5-1,5	0,8	0,9
16IR-A60		74064		74065	16IL-A60		74068		74069	16 mm	0.375	16-48	0,5-1,5		
16IR-G60		74072		74073	16IL-G60		74076		74077	16 mm	0.375	8-14	1,75-3,0	1,2	1,7
16IR-AG60		74080		74081	16IL-AG60		74084		74085	16 mm	0.375	8-48	0,5-3,0		
	Carbon Steel, Alloy Steel & Stainless Steel		Non Ferrous Metal, Stainless Steel, Aluminium & Cast Iron			Carbon Steel, Alloy Steel & Stainless Steel		Non Ferrous Metal, Stainless Steel, Aluminium & Cast Iron							

On Edge TNMC 60° Negative Rake Threading Insert

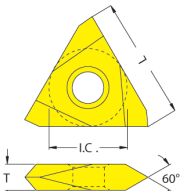

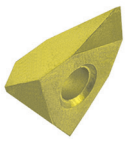

On Edge TNMC 60° Negative Rake Threading Insert					Insert Specification									
Part No.	Grade	UPC	Grade	UPC	I.C.		TPI		T		Hole Dia.		Depth.	
					I.C.	L								
TNMC-32NV-	DVP656	72003	DVK10	72004	0.375	16mm	8-48	0.5-3.0	0.125	3,18	0.150	3,81mm	0.150	3,81mm
	Carbon Steel, Alloy Steel & Stainless Steel		Non Ferrous Metal, Stainless Steel, Aluminium & Cast Iron											

No. D35 Drill Chuck Toolholder

This holder is best used for holding drills, reamers, taps, etc., without tail stock mounting. It uses a drill chuck mounted directly to a quick change holder.
This holder is supplied with a drill-chuck. Fits industry standard tool posts.

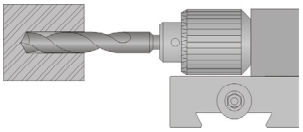

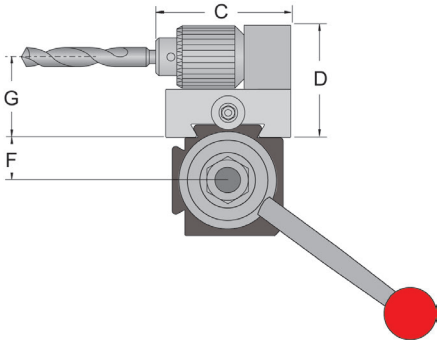

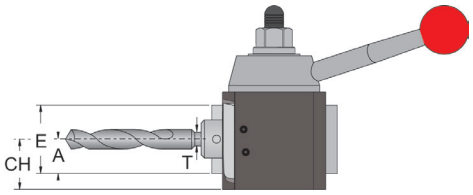

Part No.	UPC No. 733101-	System	A	T Capacity	C	D	E	F	G	CH	
										Min.CH	Max. CH
D25AXA-35	01140	in	0.980	0 - .500	4.125	3.085	1.960	0.875	2.070	0.980	1.520
		mm	24.89	0 - 12.0	104.78	78.36	49.78	22.23	52.58	24.89	38.61
D30BXA-35	01290	in	0.980	0 - .500	4.125	3.085	1.960	1.115	2.070	0.980	1.770
		mm	24.89	0 - 12.0	104.78	78.36	49.78	28.32	52.58	24.89	44.96
D35CXA-35	01442	in	1.105	0 - .500	4.625	3.700	2.210	1.199	2.580	1.105	2.145
		mm	28.07	0 - 12.0	117.48	93.98	56.13	30.45	65.53	28.07	54.48
D40CA-35	01590	in	1.105	0 - .500	4.625	3.700	2.210	1.199	2.580	1.105	2.645
		mm	28.07	0 - 12.0	117.48	93.98	56.13	30.45	65.53	28.07	67.18

No. D36 5C Collet Toolholder

This holder's wide range of collet adaptability makes this tool ideal for holding drills, taps, chucks & boring bars. It holds the tools with extreme rigidity without scarring them. Fits industry standard tool posts.

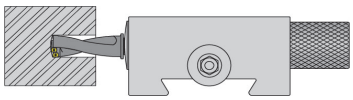

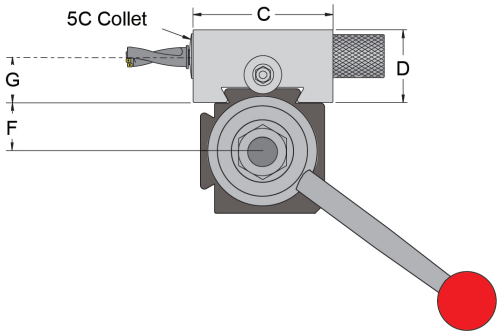

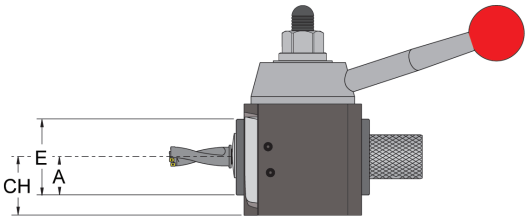

Part No.	UPC No. 733101-	System	A	C	D	E	F	G	CH	
									Min.CH	Max. CH
D25AXA-36	01142	in	1.105	3.250	2.460	2.210	0.880	1.550	1.105	1.395
		mm	28.07	82.55	62.48	56.13	22.35	39.37	28.07	35.43
D30BXA-36	01292	in	1.105	3.250	2.460	2.210	1.115	1.550	1.105	1.395
		mm	28.07	82.55	62.48	56.13	28.32	39.37	28.07	35.43
D35CXA-36	01444	in	1.355	3.500	2.710	2.710	1.245	1.625	1.355	1.145
		mm	34.42	88.90	68.83	68.83	31.62	41.28	34.42	29.08
D40CA-36	01592	in	1.355	4.000	2.710	2.710	1.530	1.625	1.355	1.145
		mm	34.42	101.60	68.83	68.83	38.86	41.28	34.42	29.08

Super Quick Change First Time Buyer Set

Now with NEW MCLNR & Twin Edge Blade free tooling!

SUPER Quick Change Tool Post First Time Buyer Set

SUPER Quick Change First Time Buyer SET
Includes FREE TOOLING

Set Includes:
(1) Tool Post
(4) Holders
(4) Toolholders **FREE**
(5) Inserts **FREE**

1ea. D1 + 1 Free MCLNR Turning Toolholder, 1 Free CNMG Turning Inserts

1ea. D2 +1 Free Boring Bar, 1 Free TCMT Turning Insert

1ea. D7-71C + 1 Free Twin Edge Blade, 1 Free Double-End Cutting Edge Insert

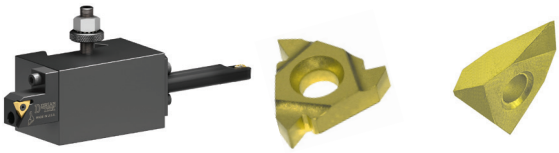

1ea. D881 + 1 Free ID Threading Bar, 1 Free TNMC On Edge Insert,
1 Free Laydown Internal Threading Insert

Part Number	SDN25AXA-FTB	SDN30BXA-FTB	SDN35CXA-FTB	SDN40CA-FTB
UPC No. 733101-	**01056**	**01058**	**01060**	**01062**
Lathe Swing	**Up to 12”**	**13" to 15"**	**14” to 17”**	**16” to 20”**
Set Includes				
(1) Super Quick Change Tool Post	SDN25AXA	SDN30BXA	SDN35CXA	SDN40CA
4) Holders No. D1 Turning & Facing Toolholder No. D2 Turning, Facing & Boring Toolholder No. D7-71C Reversible Twin Cut-Off Blade Toolholder No. D881 O.D. or I.D. Threading Toolholder	D25AXA-1 D25AXA-2 D25AXA-7-71C D25AXA-881-OE	D30BXA-1 D30BXA-2 D30BXA-7-71C D30BXA-881-OE	D35CXA-1 D35CXA-2 D35CXA-7-71C D35CXA-881-OE	D40CA-1 D40CA-2 D40CA-7-71C D40CA-881-OE
Free Tooling				
(4)Toolholders Turning Square Shank Boring Bar Cut-Off Blade Threading Bar	MCLNR08-3A STCMB06-2 TWECOB-DNTF-19-20 NL50R	MCLNR10-3A STCMB08-2 TWECOB-DNTF-19-20 NL50R	MCLNR12-4B STCMB10-2 TWECOB-DNTF-26-30 NL75R	MCLNR16-4D STCMB12-3 TWECOB-DNTF-26-30 NL75R
(5) Inserts Turning Insert Turning & Boring Insert Turning & Grooving Insert O.D. Threading Insert I.D. Threading Insert	CNMG-322-PEM-DPC25UT TTCMT-21.51-PEM-DPC25UT DNTQ-222002-3EU-DUP35UG TNMC-32NV-DVP656 11IR-A60-DVP656	CNMG-322-PEM-DPC25UT TCMT-21.51-PEM-DPC25UT DNTQ-222002-3EU-DUP35UG TNMC-32NV-DVP656 11IR-A60-DVP656	CNMG-432-PEM-DPC25UT TCMT-21.51-PEM-DPC25UT DNTQ-223003-3EU-DUP35UG TNMC-32NV-DVP656 16IR-A60-DVP656	CNMG-432-PEM-DPC25UT TCMT-32.51-PEM-DPC25UT DNTQ-223003-3EU-DUP35UG TNMC-32NV-DVP656 16IR-A60-DVP656

SUPER Quick Change Turning Sets

Turning Set Includes

(1) Tool Post

(4) Indexable Cutting Toolholders

Tooling Not Included

D1

D1

D2

D2

Part Number	SDN25AXA-TS	SDN30BXA-TS	SDN35CXA-TS	SDN40CA-TS	SDN50DA-TS	SDN60EA-TS
UPC No. 733101-	**01014**	**01015**	**01016**	**01017**	**01018**	**01019**
Lathe Swing	Up to 12"	13" to 15"	14" to 17"	16" to 20"	17" to 32"	≥ 25"
Set Includes						
(1) Tool Post	SDN25AXA	SDN30BXA	SDN35CXA	SDN40CA	SDN50DA	SDN60EA
(4) Holders	(2) D25AXA-1 (2) D25AXA-2	(2) D30BXA-1 (2) D30BXA-2	(2) D35CXA-1 (2) D35CXA-2	(2) D40CA-1 (2) D40CA-2	(2) D50DA-1 (2) D50DA-2	(2) D60EA-1 (2) D60EA-2

SUPER Quick Change Standard Sets

Standard Set Includes

(1) Tool Post

(4) Indexable Cutting Toolholders

Tooling Not Included

D1

D2

D4-DUAL

D7-71C

Part Number	SDN25AXA-INSS	SDN30BXA-INSS	SDN35CXA-INSS	SDN40CA-INSS	SDN50DA-INSS	SDN60EA-INSS
UPC No. 733101-	**01020**	**01021**	**01022**	**01023**	**01024**	**01025**
Lathe Swing	Up to 12"	13" to 15"	14" to 17"	16" to 20"	17" to 32"	≥ 25"
Set Includes						
(1) Tool Post	SDN25AXA	SDN30BXA	SDN35CXA	SDN40CA	SDN50DA	SDN60EA
(4) Holders	(1) D25AXA-1 (1) D25AXA-2 (1) D25AXA-4-750-DUAL (1) D25AXA-7-71C	(1) D30BXA-1 (1) D30BXA-2 (1) D30BXA-4-1000-DUAL (1) D30BXA-7-71C	(1) D35CXA-1 (1) D35CXA-2 (1) D35CXA-4-1000-DUAL (1) D35CXA-7-71C	(1) D40CA-1 (1) D40CA-2 (1) D40CA-4-1250-DUAL (1) D40CA-7-71C	(1) D50DA-1 (1) D50DA-2 (1) D50DA-4-1500-DUAL (1) D50DA-7-71C	(1) D60EA-1 (1) D60EA-2 (1) D60EA-4-2000-DUAL (1) D60EA-7-71C

Dorian Tool Bushings

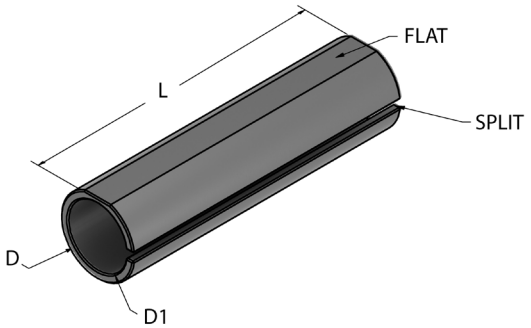

Part Number	733101-(UPC)	Outside Diameter (D)	Inside Diameter (D1)	Length (L)
D25-4B	03705	3/4	1/2	2.75
D30-4B	03707	1.0	3/4	3.25
D35-4B	03709	1.0	3/4	3.75
D40-4B	03711	1-1/4	1.0	4.50
D50-4B	03713	1-1/2	1-1/4	5.50
D60-4B	03715	2.0	1-1/2	6.50
D25-41B	03719	1.0	3/4	2.75
D30-41B	03721	1-1/4	1.0	3.25
D35-41B	03723	1-1/4	1.0	3.75
D40-41B	03725	1-1/2	1-1/4	4.50
D50-41B	03727	2.0	1-1/2	5.50
D60-41B	03729	2-1/2	2.0	6.50
D25-41SB	03733	1-1/4	1.0	3.00
D30-41SB	03735	1-1/2	1-1/4	3.50
D35-41SB	03737	1-1/2	1-1/4	4.00
D40-41SB	03739	2.0	1-1/2	4.50
D50-41SB	03729	2-1/2	2.0	6.50

Height Adjustment Screws

Part Number	733101-(UPC)	Used on the Quick Change Toolholder Series
DHAA-25	03887	D25AXA
		QITP25N
DHAA-30	03889	D30BXA
		QITP30N
DHAA-35	03891	D35CXA
		QITP35N
DHAA-40	03893	D40CA
		QITP40N
DHAA-56	03897	D50DA
		QITP50N
		D60EA
		QITP60N

THB Bushings

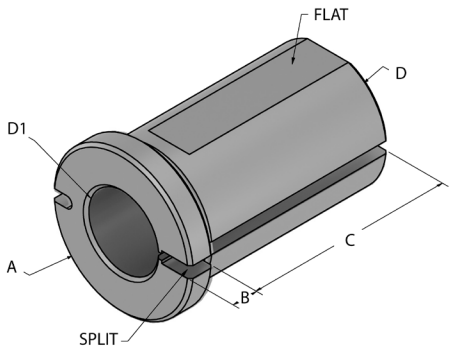

Part Number	733101- (UPC)	Out Side Diameter (D)	Inside Diameter (D1)	Flange Dia (A)	Flange Thickness (B)	Length (C)
THB75-25	93106	3/4	1/4	1.00	.25	1.50
THB75-31	93107		5/16	1.00	.25	1.50
THB75-38	93108		3/8	1.00	.25	1.50
THB75-50	93109		1/2	1.00	.25	1.50
THB100-38	93110	1	3/8	1.25	.25	1.75
THB100-50	93111		1/2	1.25	.25	1.75
THB100-62	93112		5/8	1.25	.25	1.75
THB100-75	93113		3/4	1.25	.25	1.75
THB125-38	93114	1-1/4	3/8	1.50	.25	2.00
THB125-50	93115		1/2	1.50	.25	2.00
THB125-62	93116		5/8	1.50	.25	2.00
THB125-75	93117		3/4	1.50	.25	2.00
THB125-100	93118		1	1.50	.25	2.00
THB150-50	93119	1-1/2	1/2	1.75	.25	2.50
THB150-62	93120		5/8	1.75	.25	2.50
THB150-75	93121		3/4	1.75	.25	2.50
THB150-100	93122		1	1.75	.25	2.50
THB200-50	93124	2	1/2	2.25	.25	3.50
THB200-62	93125		5/8	2.25	.25	3.50
THB200-75	93126		3/4	2.25	.25	3.50
THB200-100	93127		1	2.25	.25	3.50
THB200-125	93128		1-1/4	2.25	.25	3.50
THB200-150	93129		1-1/2	2.25	.25	3.50
THB200-175	93130		1-3/4	2.25	.25	3.50
THB250-50	93131	2-1/2	1/2	2.75	.25	4.00
THB250-62	93132		5/8	2.75	.25	4.00
THB250-75	93133		3/4	2.75	.25	4.00

How to Order the Correct Tool Post for your Lathe

Contact Information			
Company:			Name:
Address:			Phone ( )
City:	State:	Zip:	Fax ( )
Email:			

Technical Information Required

	Inch	Metric
1 Lathe Swing		
2 Tool Center Height		
3 Square Shank Tool Size		
4 Square Shank Tool Size		
5 Holding System	T-Nut	Bolt-Shaft
6 Lathe Horse Power		

7 Type of the Lathe	
8 Maximum Chuck RPM	

Type of Work	
9 Short Run	
10 Production	
11 Light Duty Work	
12 Heavy Duty Work	

Holding System & Center Height Information

T-Nut Mounting Style

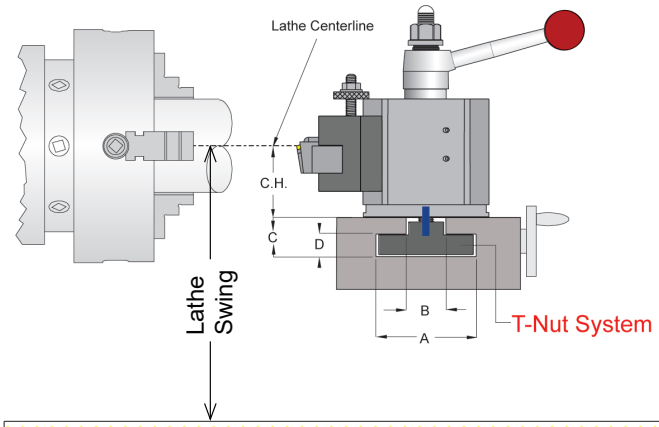

Bolt Shaft Mounting Style

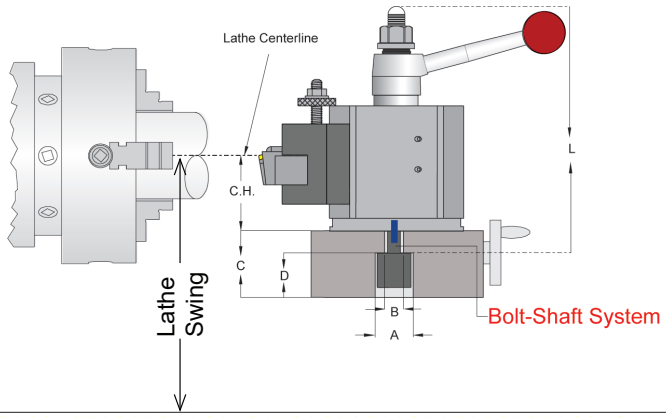

Lathe Bed way

	A	B	C	D	L	Thread Size	l	Anti-Rotation Pin Size	P
T-Nut Mounting Size									
Bolt-Shaft Mounting Sizes									

Please refer to Pgs. 12, 13, 40 & 41

Dorian Recommendation

QTY	Description	Part Number	UPC	Price	Discount	Total	**Stock**	**No Stock**	Customer Acceptance	**P.O.**

Mathematical Conversion Factors

Linear Measurement

1 foot = 12 inches
1 yard = 3 feet
1 yard = 36 inches
1 mile = 1,760 yards
1 mile = 5,280 feet
1 mile = 63,360 inches
1 light year = 5.879 trillion miles

1 inch = 2.540 centimeters
1 foot = .3048 meters
1 yard = .9144 meters
1 mile = 1.609 kilometers
1 centimeter = .3937 inches
1 meter = 3.281 feet
1 meter = 1.094 yards
1 kilometer = .6214 miles

1 kilometer = 1000 meters
1 hectometer = 100 meters
1 dekameter = 10 meters
1 meter = 10 decimeters
1 meter = 100 centimeters
1 meter = 1000 millimeters
1 light year = 9.46 trillion kilometers

Square Measurement

1 sq. foot = 144 sq. inches
1 sq. yard = 9 sq. feet
1 sq. yard = 1,296 sq. inches
1 sq. mile = 3,097,600 sq. yards
1 sq. mile = 27,878,400 sq. feet
1 sq. mile = 4,014,489,600 sq. inches
1 acre = 4,840 sq. yards
1 acre = 43,560 sq. feet
1 acre = 6,272,640 sq. inches

1 sq. inch = 6.452 sq. centimeters
1 sq. foot = .09290 sq. meters
1 sq. yard = .8361 sq. meters
1 sq. mile = 2.590 sq. kilometers
1 sq. centimeter = .155 sq. inches
1 sq. kilometer = 247.1 acres
1 sq. kilometer = .3861 sq. miles
1 sq. meter = 10.76 sq. feet
1 sq. meter = 1.196 sq. yards

1 sq. kilometer = 1,000,000 sq. meters
1 sq hectometer = 10,000 sq. meters
1 sq dekameter = 100 sq. meters
1 sq meter = 100 sq. decimeters
1 sq meter = 10,000 sq. centimeters
1 sq meter = 1,000,000 sq. millimeters

Cubic Measurement

1 cu. foot = 1,728 cu. inches
1 cu. yard = 27 cu. feet
1 cu. yard = 46,656 cu. inches

1 cu. inch = 16.39 cu. centimeters
1 cu. foot = 28,320 cu. centimeters
1 cu. foot = .02832 cu. meters
1 cu. yard = 764,600 cu. centimeters
1 cu. yard = .7646 cu. meters
1 cu. centimeter = .06102 cu. inches
1 cu. meter = 35.31 cu. feet
1 cu. meter = 61,023 cu. inches
1 cu. meter = 1.308 cu. yards

1 cu. kilometer = 1,000,000,000 cu. meters
1 cu. hectometer = 1,000,000 cu. meters
1 cu. dekameter = 1,000 cu. meters
1 cu. meter = 1,000 cu. decimeters
1 cu. meter = 1,000,000 cu. centimeters
1 cu. meter = 1,000,000,000 cu. millimeters

Weight Measurements

1 pound = 16 ounces
1 ton = 2000 pounds
1 ton = 32,000 ounces

1 ounce = 28.349527 grams
1 pound = .4536 kilograms
1 english ton = .90718 metric tons
1 gram = .03527 ounces
1 kilogram = 2.205 pounds
1 metric ton = .98421 english tons

1 kilogram = 1000 grams
1 hectogram = 100 grams
1 dekagram = 10 grams
1 gram = 10 decigrams
1 gram = 100 centigrams
1 gram = 1000 milligrams

Fluid Volume Measurements

1 gallon = 4 quarts
1 gallon = 8 pints
1 gallon = 16 cups
1 gallon = 256 liquid ounces
1 quart = 2 pints
1 quart = 4 cups
1 quart = 64 liquid ounces
1 pint = 2 cups
1 pint = 16 liquid ounces
1 cup = 8 liquid ounces

1 gallon = 3.785 liters
1 quart = .9463 liters
1 pint = .4732 liters
1 liter = .2642 gallons
1 liter = 1.057 quarts
1 liter = 2.113 pints

1 kiloliter = 1000 liters
1 hectoliter = 100 liters
1 dekaliter = 10 liters
1 liter = 10 deciliters
1 liter = 100 centiliters
1 liter = 1000 milliliters

Temperature Conversions

To convert Fahrenheit degrees into Celsius, subtract 32, multiply by .5556.

To convert Celsius into Fahrenheit, multiply by 1.8 and add 32.

Speeds

1 mile/hour = 88 feet/minute
1 mile/hour = 1.467 feet/second
1 mile/hour = 1.609 kilometers/hour
1 miles/hour = 44.70 centimeters/second
1 foot/minute = .0113636 miles/hour
1 foot/second = 30.48 centimeters/second
1 foot/second = .6818 miles/hour
1 centimeter/second = .3281 feet/second
speed of sound = 742 miles/hour in air
speed of sound = 1,193.9 kilometers/hour
speed of light = 186,295 miles/second
speed of light = 299,748 kilometers/second

Time

1 minute = 60 seconds
1 hour = 60 minutes
1 hour = 3,600 seconds
1 day = 24 hours
1 day = 1,440 minutes
1 day = 86,400 seconds
1 week = 7 days
1 week = 168 hours
1 week = 10,080 minutes
1 week = 604,800 seconds
1 year = 12 months
1 year = 52 weeks
1 year = 365 days 6 hours
1 year = 8,766 hours
1 year = 525,960 minutes
1 year = 31,557,600 seconds

Metric Conversion

From Inch to Metric Formula

Inch Value				Metric Value
1.000	x	25.4	=	25.400
1.000	÷	0.03937	=	25.400

From Metric to Inch Formula

Metric Value				Inch Value
1.000	÷	25.4	=	0.03937
1.000	x	0.03937	=	0.03937

From Inch to Metric Values

Inch				Millimeter
0.00001	x	25.4	=	0.000254
0.0001	x	25.4	=	0.00254
0.001	x	25.4	=	0.0254
0.01	x	25.4	=	0.254
0.1	x	25.4	=	2.54
1.00	x	25.4	=	25.40
1.125	x	25.4	=	28.58
1.250	x	25.4	=	31.75
1.375	x	25.4	=	34.93
1.500	x	25.4	=	38.10
1.625	x	25.4	=	41.28
1.750	x	25.4	=	44.45
1.875	x	25.4	=	47.63
2.00	x	25.4	=	50.80
3.00	x	25.4	=	76.20
4.00	x	25.4	=	101.60
5.00	x	25.4	=	127.00
6.00	x	25.4	=	152.40
7.00	x	25.4	=	177.80
8.00	x	25.4	=	203.20
9.00	x	25.4	=	228.60
10.00	x	25.4	=	254.00
11.00	x	25.4	=	279.40
12.00	x	25.4	=	304.80
13.00	x	25.4	=	330.20
14.00	x	25.4	=	355.60
15.00	x	25.4	=	381.00
16.00	x	25.4	=	406.40
17.00	x	25.4	=	431.80
18.00	x	25.4	=	457.20
19.00	x	25.4	=	482.60
20.00	x	25.4	=	508.00
21.00	x	25.4	=	533.40
22.00	x	25.4	=	558.80
23.00	x	25.4	=	584.20
24.00	x	25.4	=	609.60
25.00	x	25.4	=	635.00

1-Foot	12.00	x	25.4	=	304.80
1-Yard	36.00	x	25.4	=	914.40

From Metric to Inch Values

Millimeter				Inch
0.00001	÷	25.4	=	0.00000039
0.0001	÷	25.4	=	0.0000039
0.001	÷	25.4	=	0.000039
0.01	÷	25.4	=	0.00039
0.1	÷	25.4	=	0.00394
1	÷	25.4	=	0.0394
1.1	÷	25.4	=	0.0433
1.2	÷	25.4	=	0.0472
1.3	÷	25.4	=	0.0512
1.4	÷	25.4	=	0.0551
1.5	÷	25.4	=	0.0591
1.6	÷	25.4	=	0.0630
1.7	÷	25.4	=	0.0669
1.8	÷	25.4	=	0.0709
1.9	÷	25.4	=	0.0748
2	÷	25.4	=	0.0787
3	÷	25.4	=	0.1181
4	÷	25.4	=	0.1575
5	÷	25.4	=	0.1969
6	÷	25.4	=	0.2362
7	÷	25.4	=	0.2756
8	÷	25.4	=	0.3150
9	÷	25.4	=	0.3543
10	÷	25.4	=	0.3937
11	÷	25.4	=	0.4331
12	÷	25.4	=	0.4724
13	÷	25.4	=	0.5118
14	÷	25.4	=	0.5512
15	÷	25.4	=	0.5906
16	÷	25.4	=	0.6299
17	÷	25.4	=	0.6693
18	÷	25.4	=	0.7087
19	÷	25.4	=	0.7480
20	÷	25.4	=	0.7874
21	÷	25.4	=	0.8268
22	÷	25.4	=	0.8661
23	÷	25.4	=	0.9055
24	÷	25.4	=	0.9449
25	÷	25.4	=	0.9843

1-Meter	1000	÷	25.4	=	39.3701
1-Decimeter	100	÷	25.4	=	3.9370
1-Centimeter	10	÷	25.4	=	0.3937
1-Millimeter	1	÷	25.4	=	0.0394

Dorian Tool International, Inc. is not responsible for any typographical errors in this catalog.

Dorian Tool International, Inc. reserves the right to change any product specifications without any notice.

Quick Change Tool Posts and Holders are manufactured from alloy steels and have protective coatings to prolong their life. Use proper Personal Protection Equipment such as gloves, safety glasses, steel toe shoes, etc when handling these products to prevent any personal injury or skin allergies.

These products are intended to be used on manual or cnc lathes. When using these products and operating manual or cnc lathes follow safety guidelines such as, but not limited to:

- Wear proper personal protection equipment such as high impact resistant safety glasses, steel toe shoes, protective masks or face shields etc.
- Do not wear loose clothing or jewelry that may get caught up
- Keep long hair tied back and roll up sleeves
- Do not wear gloves
- Do not make adjustments while the machine is operating
- Do not place hands on the quick change toolpost or quick change toolholder, chuck, work-piece, tailstock or any other moving part of the machine unless the machine is completely and safely stopped. Refer to machine manufacturer's safety manual before using the machine.
- Metalcutting involves high-energy, high-speed and high-force moving components. Dorian Tool products are manufactured to withstand these conditions; however, if subjected to extremely high forces or sudden impacts or are in some other way abused or altered, they may fracture and fly/projectile out of the machine. Ensure that the machine is properly enclosed to effectively stop such projectiles with covers, doors and appropriate enclosures.
- Metalcutting creates high temperatures. Do not touch any cutting tools or toolpost or holders until they have cooled off.
- Ensure that cutting tools that are in toolpost holders are sharp: Prior to using a lathe, inspect the cutting tool to ensure it's sharp. Cutting tools deteriorate over time. The more you use the same cutting tool, the duller it will become. Eventually, it becomes so dull that it dislodges chunks of material from the workpiece rather than creating a clean cut. When this happens, the large chunks can shoot out and cause bodily injury.
- Metalcutting involves creating chips that dislodge from the workpiece material. These chips are very hot and sharp and can be in different sizes (broken into small pieces or long strings). Protect yourself from these flying chips by making sure that the machine has proper covers to keep the chips from flying out, and by wearing appropriate personal protection equipment. Do not touch hot chips with bare hands.
- Do not operate machinery under the influence of alcohol or drugs.

International Sales Representatives

Canada
Laura Obirek
Eagle Industrial Ltd
Unit 1 - 42 Matheson Parkway
Winnipeg, Manitoba, Canada R2C 2Z2
Tel: +204 654 9894
E-mail: lpo@eagleindustrial.ca
Website: www.eagleindustrial.ca

Dorian Tool Italy
Piero Leone
Via della Magliana, 525E – 00148 Rome, Italy
Tel: +39 0651963476/ +39 337782009
Fax: + 39 0651960350
E-mail: piero.leone@minicutitalia.com
Website: www.minicutitalia.com
Skype: INTERNATIONAL MINICUT ITALIA

Dorian Tool Mexico
Grupo Mecausa de Maquinas y Herramientas
Guerrero 58, Col. San Javier
Tlalnepantla, Edo. Mexico, Mexico
Tel: +52 55 5362 2262
E-mail: yigiannetti@doriantool.com / Customer.service@mecausa.com
Website: www.doriantoolmexico.com

China
Tony Kong
ShanDong ChongDe Precision Machinery Co.,Ltd.
JunTai Road, Economic Development Zone(West),
Qufu, ShanDong.
Tel: +86 5374455161
Cell /Mobile: +86 15069700138
E-mail: tech@qufuchongde.com

Index

Introduction of Quadra® Indexing Quick Change Tool Post 2

Introduction of SDN Super Quick Change Tool Post 3

Terminology of a Manual Lathe 4

Terminology of a CNC Tool Room Lathe 5

Quadra® Tool Post and Toolholders 6

Quadra® Tool Post and Toolholder Sizes & Crossover 7
Quadra® Tool Post Indexing System & Multi Operation Set-Up 8
Quadra® Tool Post and Toolholders Turning Application 9
Quadra® Tool Post Cross Section 10
Quadra® Tool Post Technical Information 11
Quadra® Tool Post Mounting System 12
Quadra® T-Nut Data 13
Quadra® Tool Post Cutting Tool Center Height Set-Up 14
Quadra® Tool Post & Toolholders Features 15
Quadra® Tool Post & Toolholders Structure Specification 16
Quadra® Tool Post & Toolholders Features 17
Quadra® Quick Change Tool Post Ordering Specification 18
Quadra® Quick Change-Toolholder Ordering Specifications 19
Quadra® Quick Change-Toolholder Ordering Specifications 20
Quadra® Quick Change-Toolholder Ordering Specifications 21
Quadra® Quick Change-Toolholder Ordering Specifications 22
Slot Grip Cut-Off Blades Ordering Specifications 23
Slot Grip Cut-Off Inserts Ordering Specifications 24
Kool-Cut™ Twin Edge Blade Ordering Specifications 25
Kool-Cut™ Twin Edge Insert Turning & Grooving Application 26
Kool-Cut™ Twin Edge Inserts Ordering Specifications 27
Quadra® Quick Change-Toolholder Ordering Specifications 28
Quadra® Quick Change-Toolholder Ordering Specifications 29
Quadra® Indexing Quick Change Tool Post & Toolholders Sets 31
Quadra® Indexing Quick Change Tool Post & Toolholders Sets 32

SDN Super Quick Change Tool Post 34

SDN Tool Post and Toolholders Sizes & Crossover 35
SDN Tool Post and Toolholders Turning Application 36
SDN Quick Change Tool Post Cross Section 37
SDN Quick Change Tool Post Cross Section 38
SDN Quick Change Tool Post Technical Information 39
SDN Quick Change Tool Post Cutting Tool Center Height Set-Up 40
SDN Quick Change Tool Post Mounting System 41
SDN T-Nut Data 42
SDN Quick Change Tool Post & Toolholders Structure Specification 43
SDN Quick Change Tool Post & Toolholders Structure Specification 44
SDN Quick Change Tool Post & Toolholders Structure Specification 45
SDN Quick Change Tool Post Ordering Specification 46
SDN-Toolholder Ordering Specification 47
SDN-Toolholder Ordering Specification 48
SDN-Toolholder Ordering Specification 49
SDN-Toolholder Ordering Specification 50
Slot Grip Cut-Off Blades Ordering Specification 51
Slot Grip Cut-Off Blades Ordering Specification 52
Kool-Cut™ Twin Edge Blade Ordering Specification 53
Kool-Cut™ Twin Edge Insert Turning & Grooving Application 54
Kool-Cut™ Twin Edge Blade Ordering Specification 55
SDN-Toolholder Ordering Specification 56
SDN-Lay-Down Threading Bar Ordering Specification 57
SDN-Toolholder Ordering Specification 58
SDN Quick Change Tool Post & Toolholders Sets 60
SDN Quick Change Tool Post & Toolholders Sets 61
Spare Parts 62
Spare Parts 63

Dorian Tool International, Inc. is not responsible for any typographical errors in this catalog.

Dorian Tool International, Inc. reserves the right to change any product specifications without any notice.

Notes

Tool Post Catalog

Dorian Tool International, Inc.
615 County Rd 219, East Bernard
TX 77435, USA
Phone: 979-282-2861
Toll free: 800-627-0266
Fax: 888-508-7055
sales@doriantool.com
www.doriantool.com

USA Warehouse Locations: ● East Bernard, TX